ARCHITECTURA HANDWASHBASIN RECTANGLE

PRODUCT INFORMATION

Article title	Villeroy & Boch Architectura Handwashbasin, 500 x 380 x 150 mm, White Alpin, without overflow
Article number	43735101
Assembly / Assembly type	wall-mounted
Scope of delivery	1 x handwashbasin
Depth in mm	380
Width in mm	500
Height in mm	150
Interior depth	100
Collection	Architectura
Tap fitting / Tap hole information	Please note: unclosable outlet valve must be used with models without overflow
Suitable for	1-hole mixer
Material	Sanitary ceramics
surface	glossy
Colour name	White Alpin
With overflow	No
Shape	Rectangle
Colour designation	White Alpin
Antibacterial surface (with AntiBac)	No
Easy surface cleaning (CeramicPlus)	No
Number of tap holes punched through	1
Number of bowls	1

TECHNICAL DRAWINGS

43735101

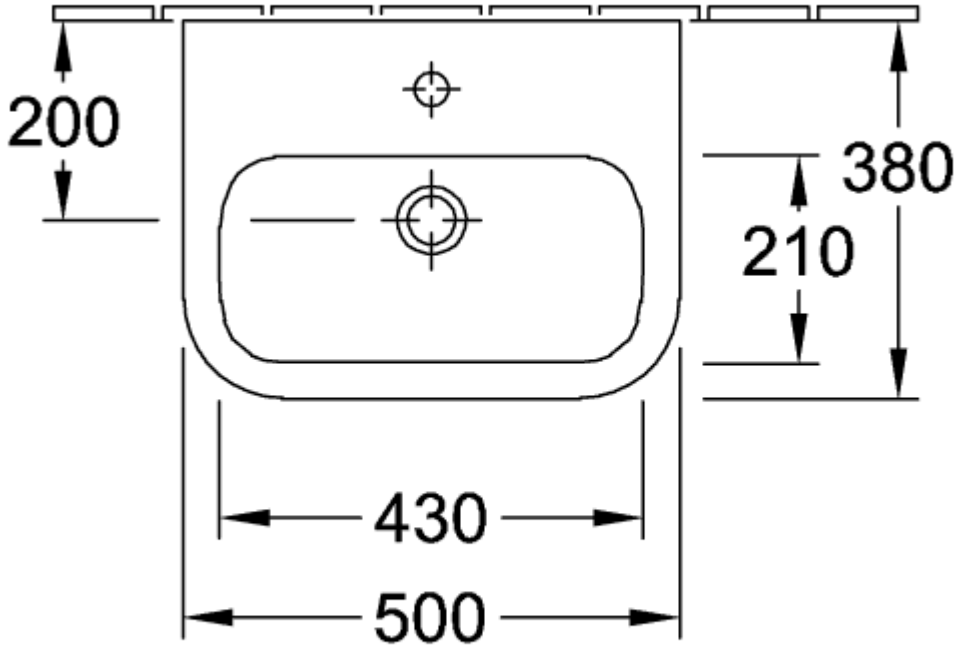
200
380
210
430
500

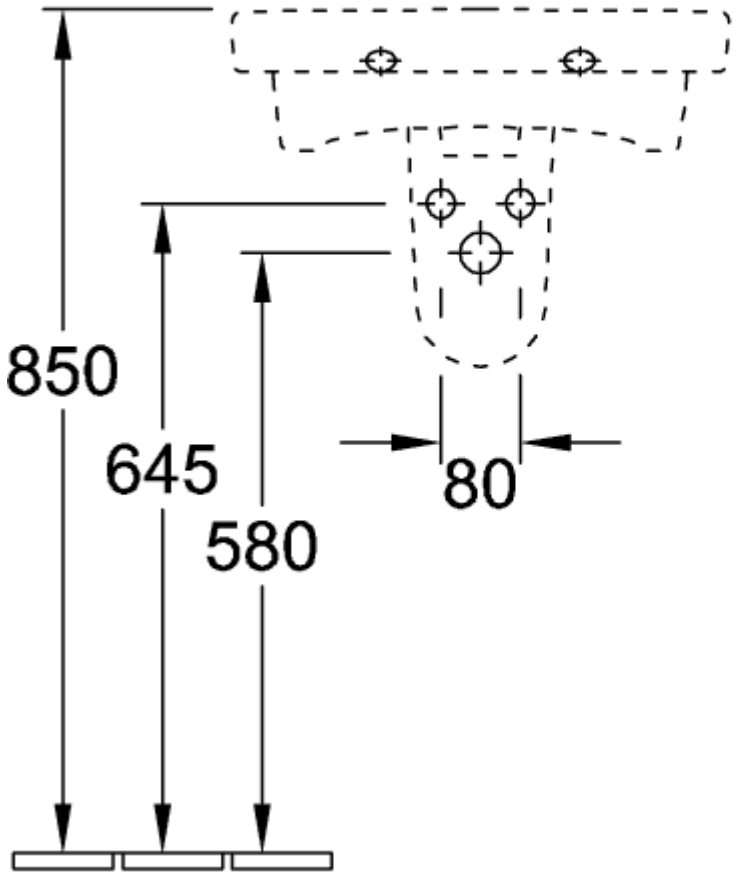
850
645
580
80
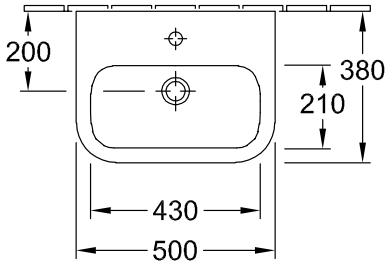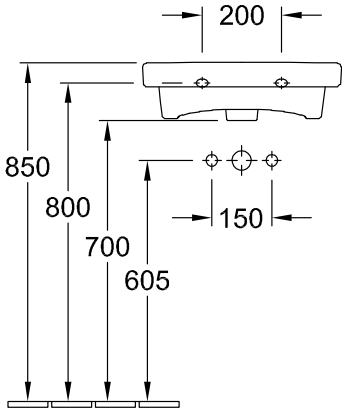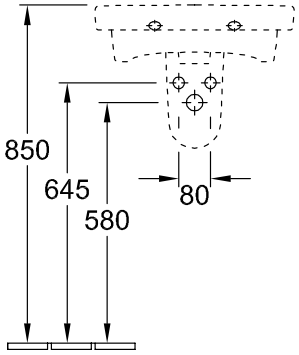
43735101