COLLARO SURFACE-MOUNTED WASHBASIN RECTANGLE

PRODUCT INFORMATION

Article title	Villeroy & Boch Collaro Surface-mounted washbasin, 560 x 360 x 145 mm, White Alpin, without overflow
Article number	4A205601
Assembly / Assembly type	Surface-mounted
Assembly instructions	Recommendation: to be installed with a gap of at least 50 mm between the washbasin and the wall
Scope of delivery	1 x surface-mounted washbasin , 1 x fastening set 1 x cut-out template
Depth in mm	360
Width in mm	560
Height in mm	145
Interior depth	100
Collection	Collaro
Tap fitting / Tap hole information	• when using a wall-mounted tap fitting, we recommend a projection of at least 210 mm • Please note: unclosable outlet valve must be used with models without overflow
Suitable for	Wall-mounted tap fittings, Matching Villeroy&Boch furniture|Tap fitting with raised base
Material	TitanCeram
surface	glossy
Colour name	White Alpin
With overflow	No
Shape	Rectangle
Colour designation	White Alpin
Antibacterial surface (with AntiBac)	No
Easy surface cleaning (CeramicPlus)	No
Underside of washbasin	unground
Number of bowls	1

TECHNICAL DRAWINGS

4A205601

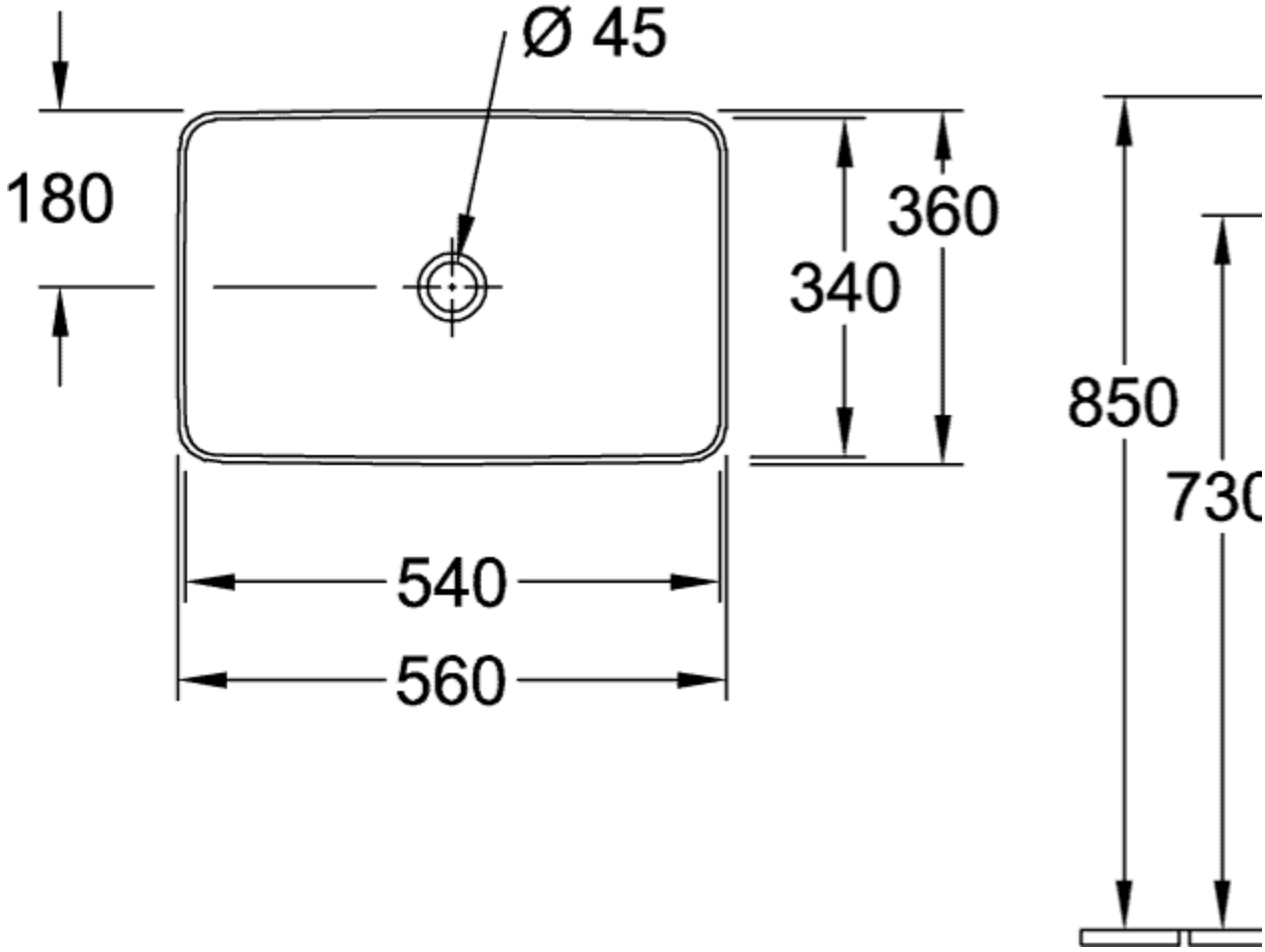
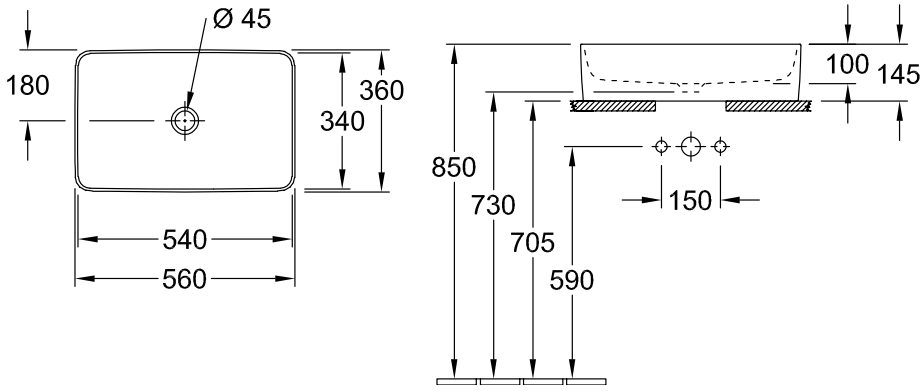
4A205601