MEMENTO 2.0 WASHBASIN RECTANGLE

PRODUCT INFORMATION

Article title	Villeroy & Boch Memento 2.0 Washbasin, 1200 x 470 x 150 mm, White Alpin, without overflow, ground
Article number	4A22CF01
Assembly / Assembly type	wall-mounted
Scope of delivery	1 x washbasin , 1 x cut-out template
Depth in mm	470
Width in mm	1200
Height in mm	150
Interior depth	95
Collection	Memento 2.0
Tap fitting / Tap hole information	• when using a wall-mounted tap fitting, we recommend a projection of at least 205 mm • A non-closing valve or the ViFlow (concealed overflow) must be used for models without overflow function.
Suitable for	Wall-mounted tap fittings, Matching Villeroy&Boch furniture
Material	TitanCeram
surface	glossy
Colour name	White Alpin
With overflow	No
Shape	Rectangle
Colour designation	White Alpin
Antibacterial surface (with AntiBac)	No
Easy surface cleaning (CeramicPlus)	No
Underside of washbasin	ground
Number of bowls	1

TECHNICAL DRAWINGS

4A22CF01

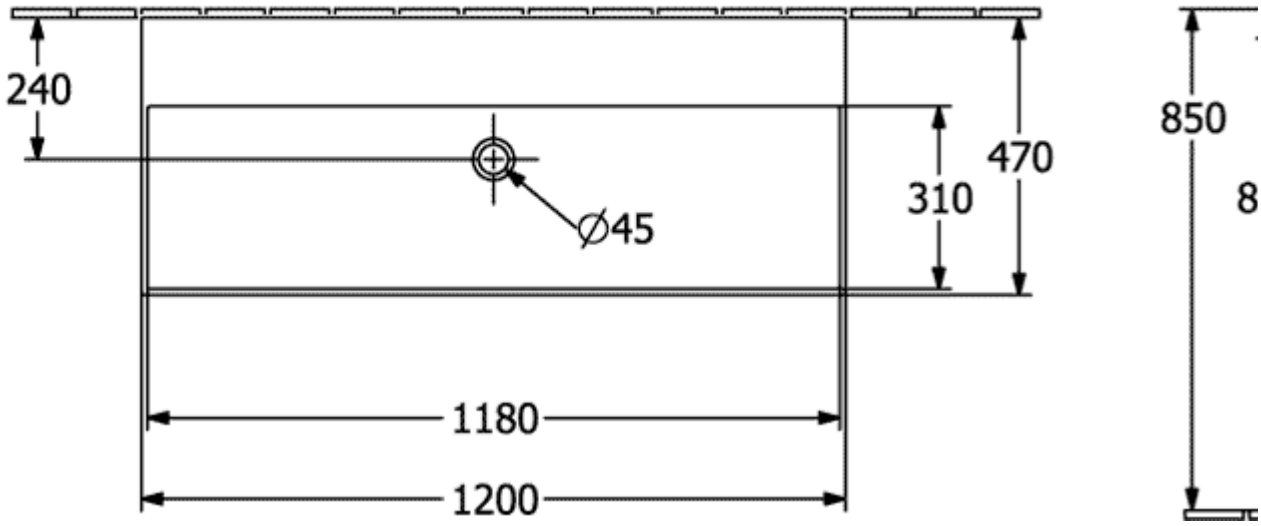
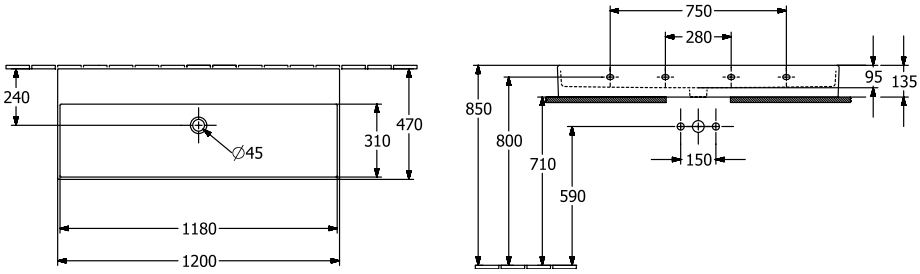
4A22CF01