O.NOVO HANDWASHBASIN COMPACT OVAL

PRODUCT INFORMATION

Article title	Villeroy & Boch O.novo Handwashbasin Compact, 360 x 270 x 160 mm, White Alpin, without overflow
Article number	53603701
Assembly / Assembly type	wall-mounted
Scope of delivery	1 x handwashbasin
Depth in mm	270
Width in mm	360
Height in mm	160
Interior depth	100
Collection	O.novo
Tap fitting / Tap hole information	Please note: unclosable outlet valve must be used with models without overflow
Suitable for	1-hole mixer
Material	Sanitary ceramics
surface	glossy
Colour name	White Alpin
With overflow	No
Shape	Oval
Colour designation	White Alpin
Antibacterial surface (with AntiBac)	No
Easy surface cleaning (CeramicPlus)	No
Number of tap holes pre-drilled	2
Number of bowls	1

TECHNICAL DRAWINGS

53603701

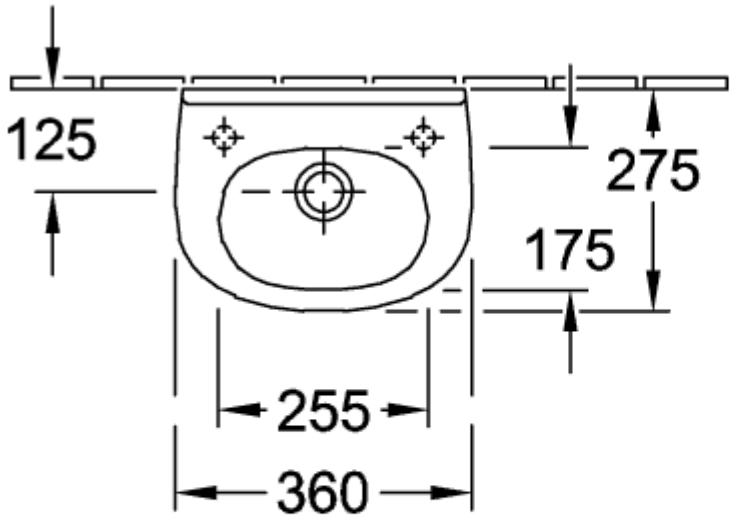

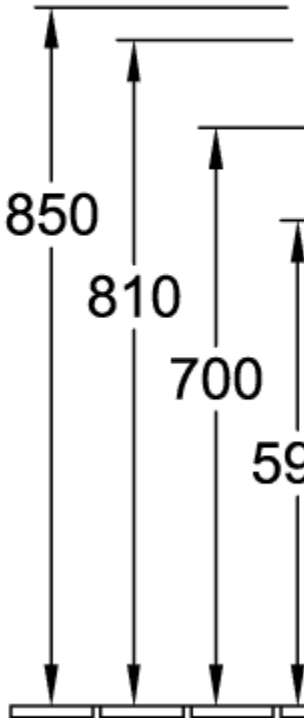
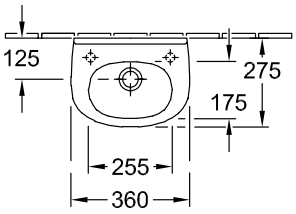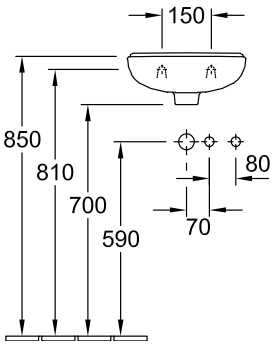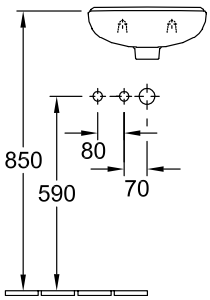
53603701