SUBWAY 2.0 WASHDOWN TOILET, RIMLESS OVAL

PRODUCT INFORMATION

Article title	Villeroy & Boch Subway 2.0 Washdown toilet, rimless, wall-mounted, with ViFresh, White Alpin
Article number	5614A101
Assembly / Assembly type	wall-mounted
Assembly instructions	not suitable for installation with flush valves
Scope of delivery	1 x washdown toilet, rimless , 2 x integrated holders for rim blocks and gel cleaners with twist-on lids in White and Chrome (ViFresh technology)
Depth in mm	560
Width in mm	370
Height in mm	365
Collection	Subway 2.0
Suitable for	Concealed cistern
Innovative flushing technology (with TwistFlush)	No
Flush volume l	3 / 4,5 l
Wall-mounted - floor-standing	wall-mounted
Material	Sanitary ceramics
surface	glossy
Colour name	White Alpin
Design Awards	German Design Award 2016
Shape	Oval
Colour designation	White Alpin
Antibacterial surface (with AntiBac)	No
Easy surface cleaning (CeramicPlus)	No
Rimless (mit DirectFlush)	Yes
Flush type	Washdown toilet
Integrated freshness solution (with ViFresh)	Yes
Outlet / outlet	horizontal outlet

TECHNICAL DRAWINGS

5614A101

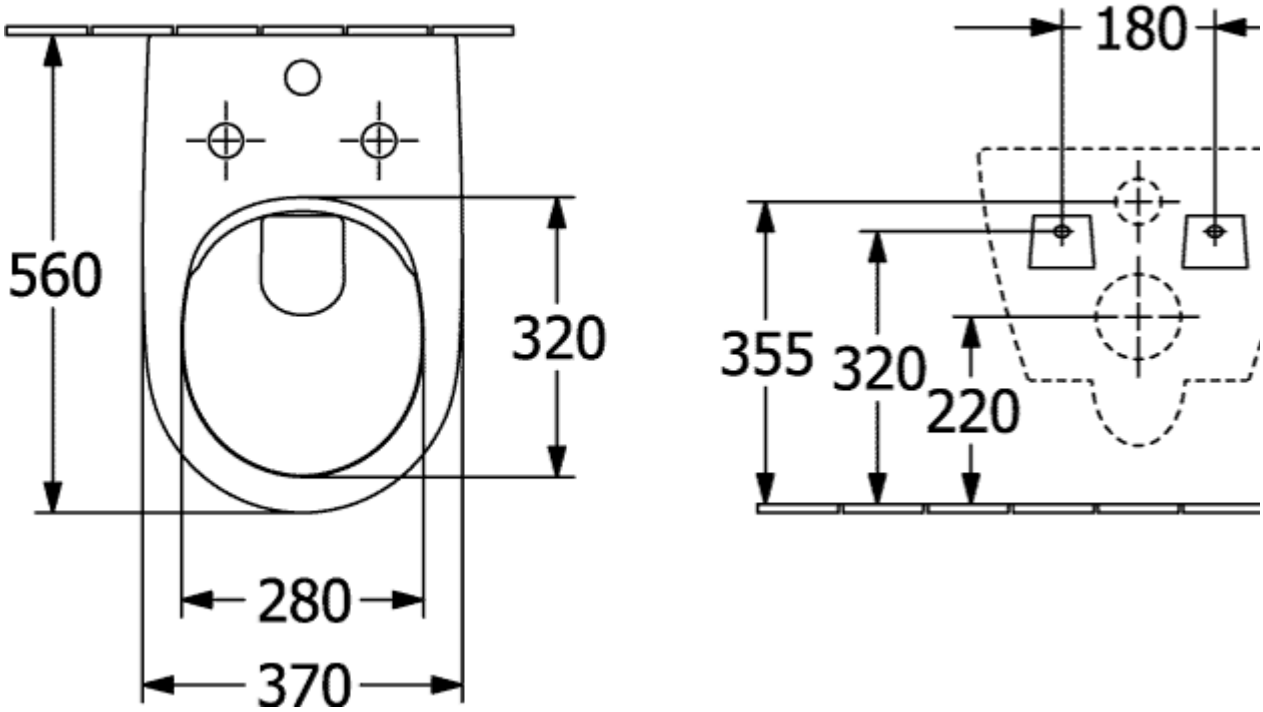
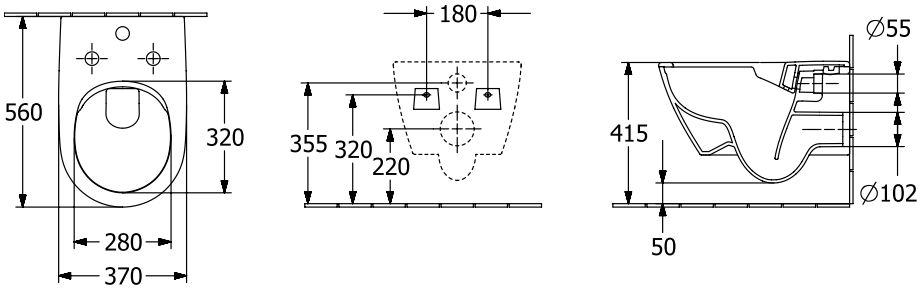
5614A101