ARCHITECTURA WASHDOWN TOILET, RIMLESS OVAL

PRODUCT INFORMATION

Article title	Villeroy & Boch Architectura Washdown toilet, rimless, floor-standing, White Alpin
Article number	5690R001
Assembly / Assembly type	floor-standing
Scope of delivery	1 x washdown toilet, rimless , 1 x fastening set
Depth in mm	540
Width in mm	370
Height in mm	400
Collection	Architectura
Suitable for	Concealed cistern
Innovative flushing technology (with TwistFlush)	No
Flush volume l	3 / 4,5 l
Wall-mounted - floor-standing	floor-standing
Material	Sanitary ceramics
surface	glossy
Colour name	White Alpin
Shape	Oval
Colour designation	White Alpin
Antibacterial surface (with AntiBac)	No
Easy surface cleaning (CeramicPlus)	No
Rimless (mit DirectFlush)	Yes
Flush type	Washdown toilet
Integrated freshness solution (with ViFresh)	No
Outlet / outlet	horizontal outlet

TECHNICAL DRAWINGS

5690R001

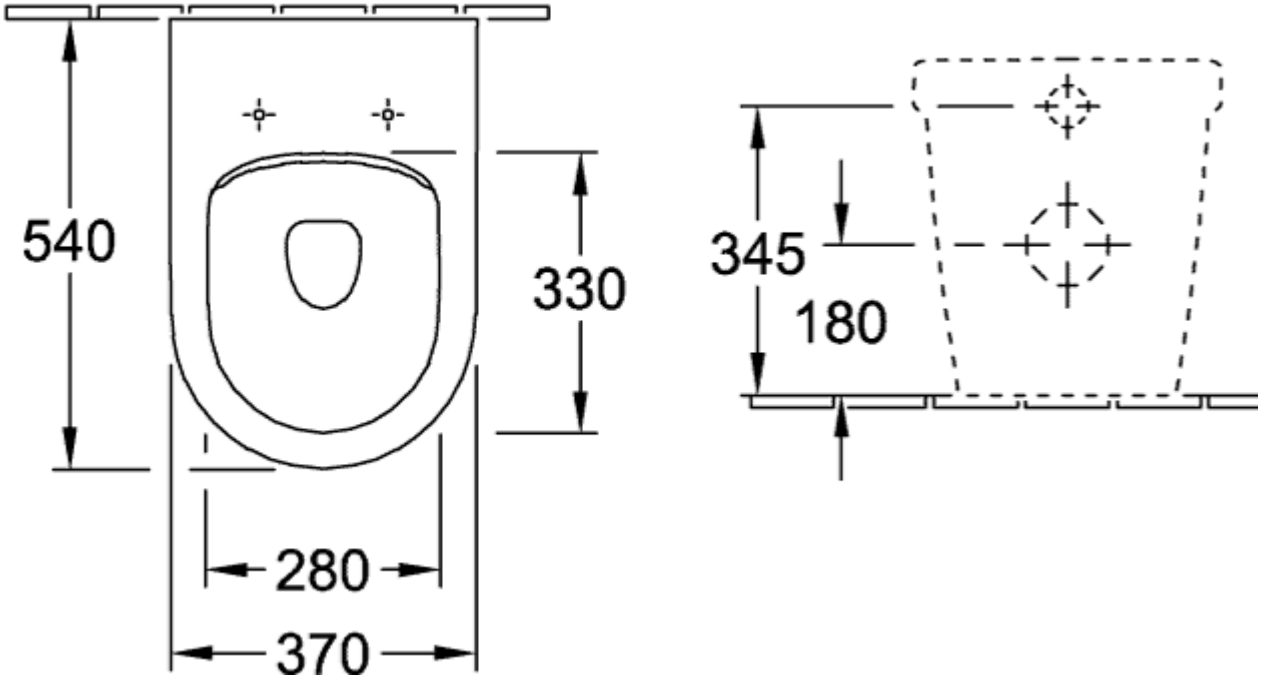
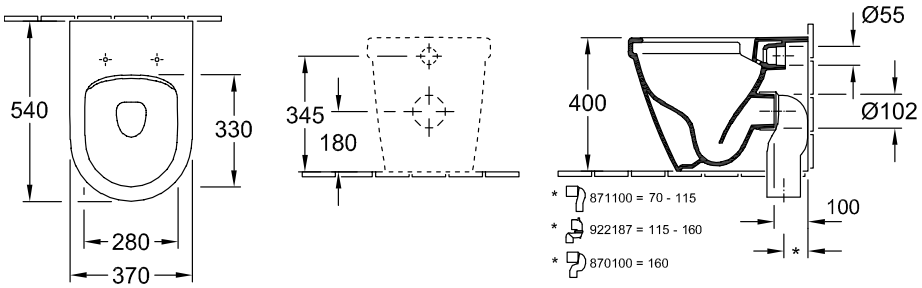
5690R001