# LOOP & FRIENDS UNDERCOUNTER WASHBASIN OVAL

## PRODUCT INFORMATION

| | |
|---|---|
| Article title | Villeroy & Boch Loop & Friends Undercounter washbasin, 485 x 325 x 215 mm, White Alpin, with overflow |
| Article number | 61612001 |
| Assembly / Assembly type | Undercounter |
| Assembly instructions | the hole for the washbasin can only be cut out using the original washbasin because tolerances of several millimetres are possible, installation possible in natural stone and laminate countertops |
| Scope of delivery | 1 x undercounter washbasin , 1 x extended ball rod to operate pop-up outlet valve 1 x fastening set |
| Depth in mm | 325 |
| Width in mm | 485 |
| Height in mm | 215 |
| Interior depth | 160 |
| Collection | Loop & Friends |
| Material | Sanitary ceramics |
| surface | glossy |
| Colour name | White Alpin |
| With overflow | Yes |
| Shape | Oval |
| Colour designation | White Alpin |
| Antibacterial surface (with AntiBac) | No |
| Easy surface cleaning (CeramicPlus) | No |
| Number of bowls | 1 |

## TECHNICAL DRAWINGS

**61612001**

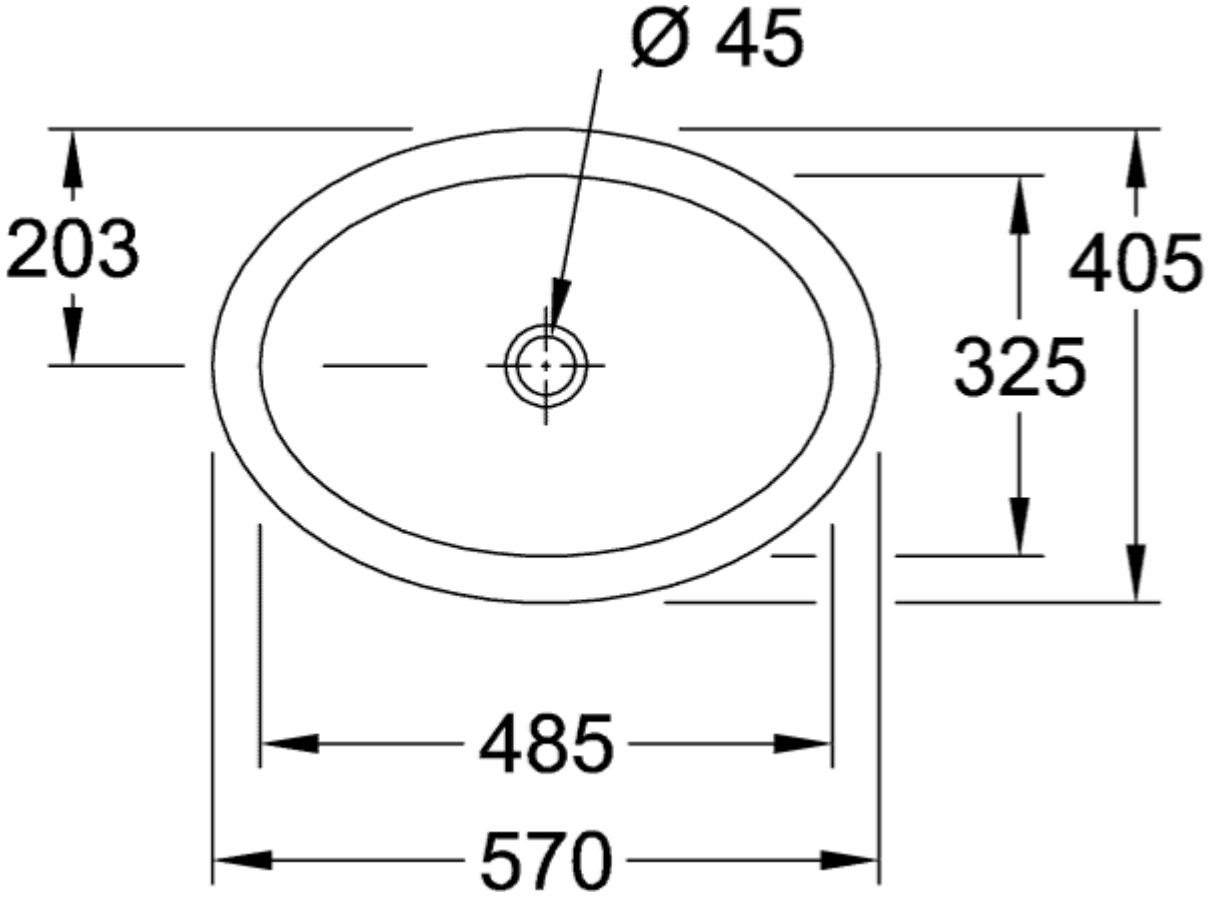


**61612001**

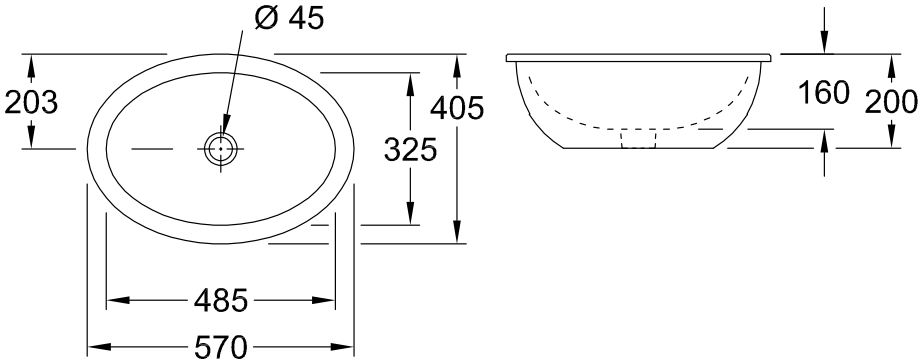

**61612001**

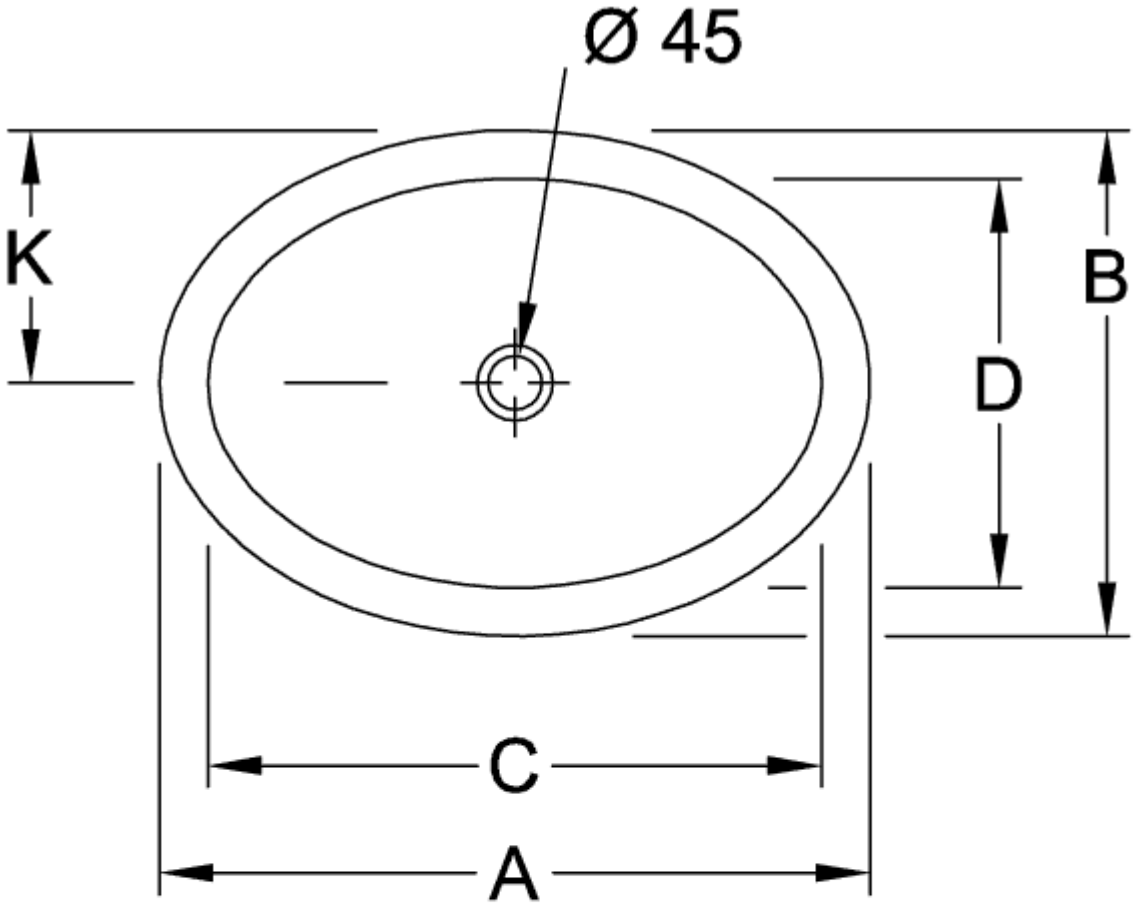


| | A | B | C | D | G | K | L |
|---|---|---|---|---|---|---|---|
| 6161 30 | 660 | 470 | 560 | 375 | 220 | 235 | 180 |
| 6161 31 | 660 | 470 | 560 | 375 | 220 | 235 | 180 |
| 6161 20 | 570 | 405 | 485 | 325 | 200 | 203 | 160 |
| 6161 21 | 570 | 405 | 485 | 325 | 200 | 203 | 160 |
| 6161 10 | 505 | 360 | 430 | 285 | 180 | 180 | 140 |
| 6161 11 | 505 | 360 | 430 | 285 | 180 | 180 | 140 |
| 6161 00 | 450 | 320 | 385 | 255 | 160 | 160 | 120 |
| 6161 01 | 450 | 320 | 385 | 255 | 160 | 160 | 120 |

## 61612001

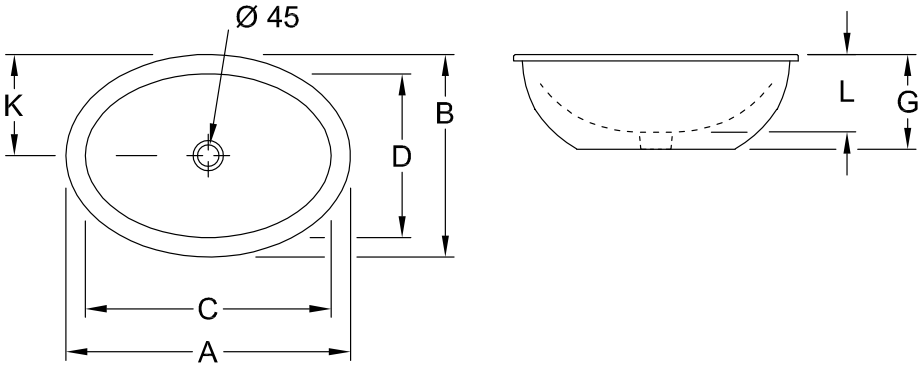


| | A | B | C | D | G | K | L |
|---|---|---|---|---|---|---|---|
| 6161 30 | 660 | 470 | 560 | 375 | 220 | 235 | 180 |
| 6161 31 | 660 | 470 | 560 | 375 | 220 | 235 | 180 |
| 6161 20 | 570 | 405 | 485 | 325 | 200 | 203 | 160 |
| 6161 21 | 570 | 405 | 485 | 325 | 200 | 203 | 160 |
| 6161 10 | 505 | 360 | 430 | 285 | 180 | 180 | 140 |
| 6161 11 | 505 | 360 | 430 | 285 | 180 | 180 | 140 |
| 6161 00 | 450 | 320 | 385 | 255 | 160 | 160 | 120 |
| 6161 01 | 450 | 320 | 385 | 255 | 160 | 160 | 120 |