# O.NOVO CORNER HANDWASHBASIN COMPACT QUARTER CIRCLE

## PRODUCT INFORMATION

| | |
|---|---|
| Article title | Villeroy & Boch O.novo Corner handwashbasin Compact, 415 x 415 x 195 mm, White Alpin, with overflow, unground |
| Article number | 73274001 |
| Assembly / Assembly type | Corner installation |
| Scope of delivery | 1 x corner handwashbasin |
| Depth in mm | 415 |
| Width in mm | 415 |
| Height in mm | 195 |
| Interior depth | 145 |
| Collection | O.novo |
| Suitable for | 1-hole mixer |
| Material | Sanitary ceramics |
| surface | glossy |
| Colour name | White Alpin |
| With overflow | Yes |
| Shape | Quarter circle |
| Colour designation | White Alpin |
| Antibacterial surface (with AntiBac) | No |
| Easy surface cleaning (CeramicPlus) | No |
| Number of tap holes punched through | 1 |
| Underside of washbasin | unground |
| Number of bowls | 1 |

## TECHNICAL DRAWINGS

**73274001**

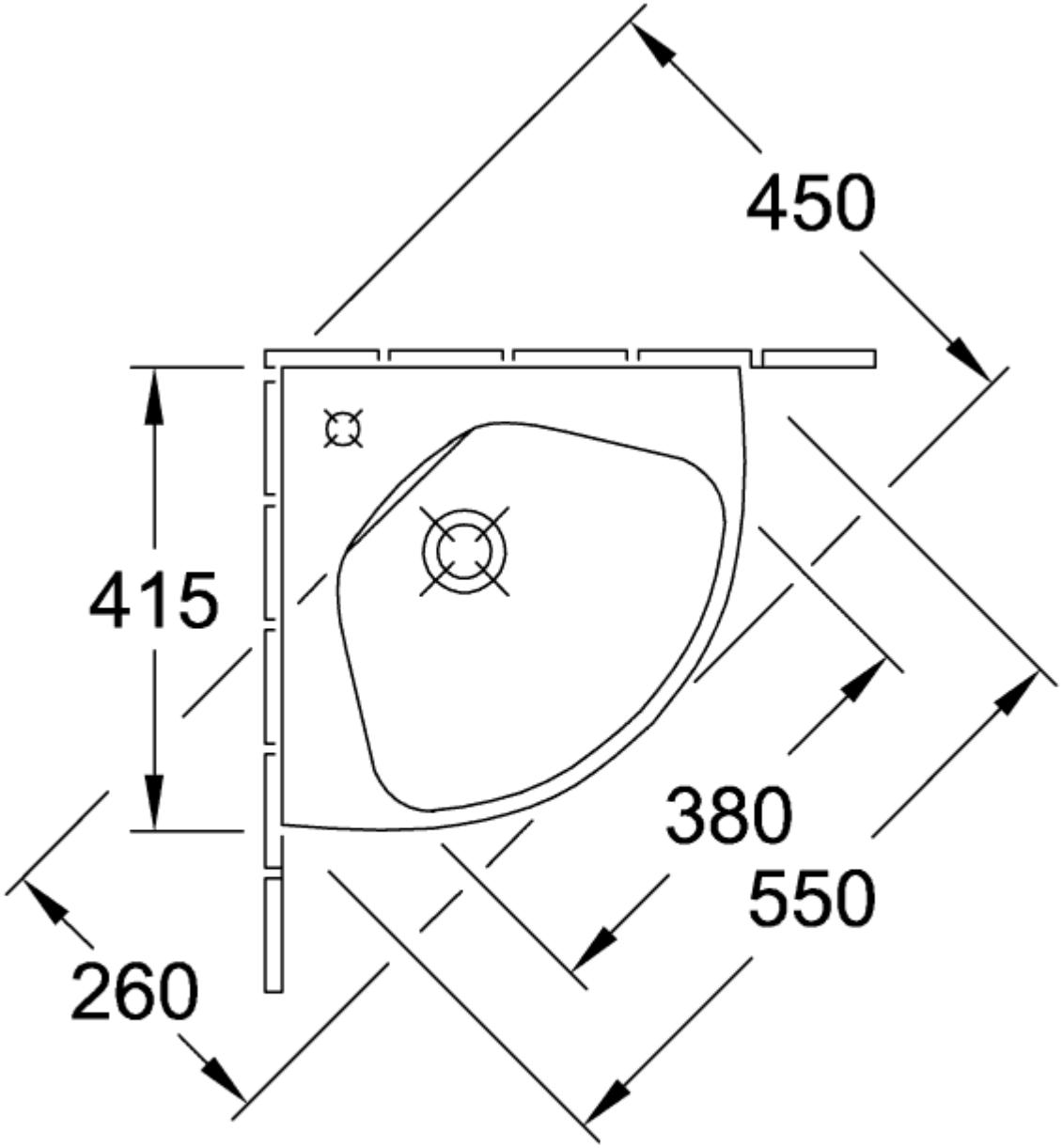
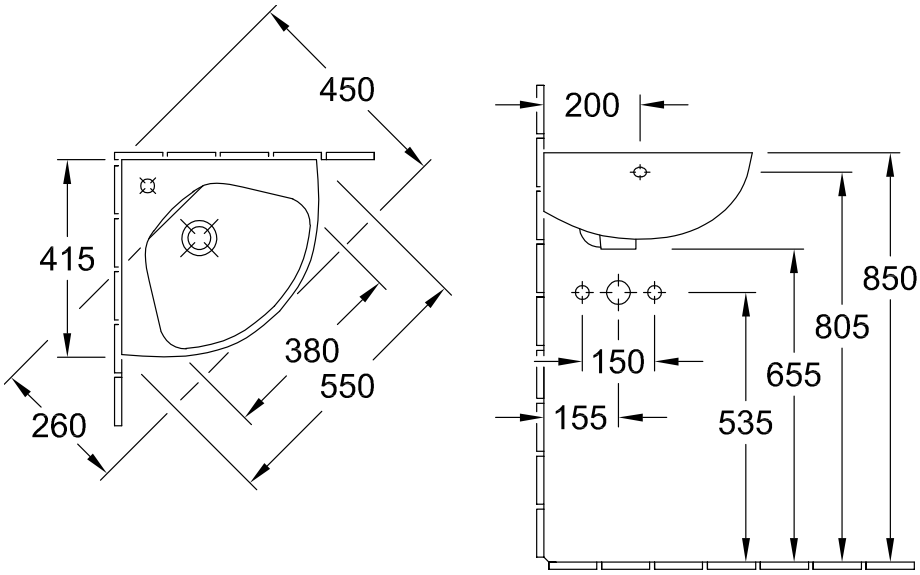
**73274001**