SUBWAY 2.0 VANITY UNIT ANGULAR

PRODUCT INFORMATION

Article title	Villeroy & Boch Subway 2.0 Vanity unit, 2 pull-out compartments, 787 x 520 x 449 mm, White Matt
Article number	A69600MS
Assembly / Assembly type	wall-mounted
Type of opening	2 pull-out compartments
Equipment	6 x narrow glass drawer divider , 1 x accessory box S 1 x accessory box M 1 x accessory box L 2 x pull-out compartment
Scope of delivery	1 x vanity unit , 1 x fastening set
Position of washbasin	washbasin on the middle
Depth in mm	449
Width in mm	787
Height in mm	520
Collection	Subway 2.0
Suitable for	selected vanity washbasins
Function	with SoftClosing
Material front	Chipboard
Surface of front	Direct coating
Material body	Chipboard
Surface of body	Direct coating
Other material	Handle: Plastic
Other surfaces	Handle: Paint, matt
Shape	Angular
Colour designation	White Matt
Other colour designations	Handle: matt silver-coloured
With lighting	No
Smart home compatible	No

TECHNICAL DRAWINGS

A69600MS

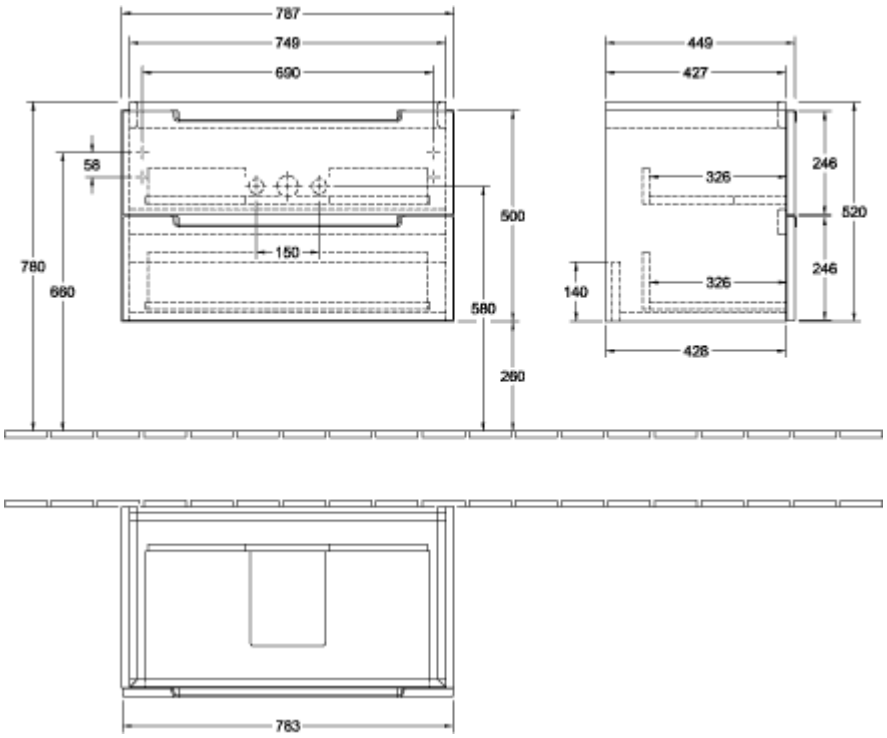
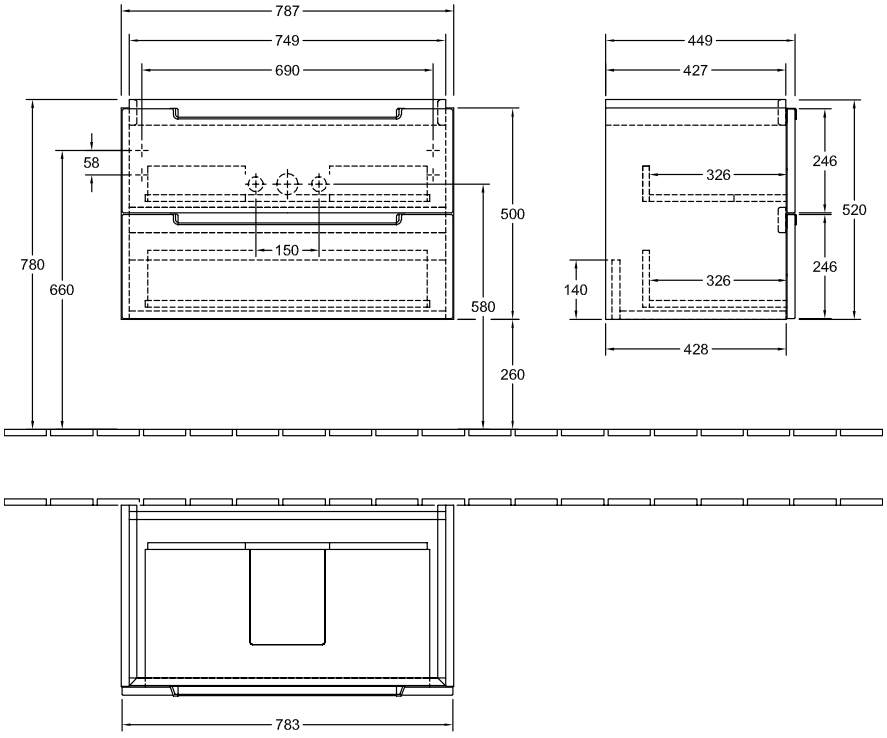
A69600MS