SUBWAY 2.0 TALL CABINET ANGULAR

PRODUCT INFORMATION

Article title	Villeroy & Boch Subway 2.0 Tall cabinet, 1 drawer, 2 doors, 350 x 1650 x 370 mm, White Matt
Article number	A70800MS
Assembly / Assembly type	wall-mounted
Type of opening	1 drawer, 2 doors
Door hinge	hinges on right
Equipment	2 x door , 1 x pull-out compartment 3 x shelf
Scope of delivery	1 x tall cabinet , 1 x fastening set
Depth in mm	370
Width in mm	350
Height in mm	1650
Collection	Subway 2.0
Function	with SoftClosing
Material front	Chipboard
Surface of front	Direct coating
Material body	Chipboard
Surface of body	Direct coating
Other material	Handle: Plastic
Other surfaces	Handle: Paint, matt
Shape	Angular
Colour designation	White Matt
Other colour designations	Handle: matt silver-coloured
With lighting	No
Smart home compatible	No

TECHNICAL DRAWINGS

A70800MS

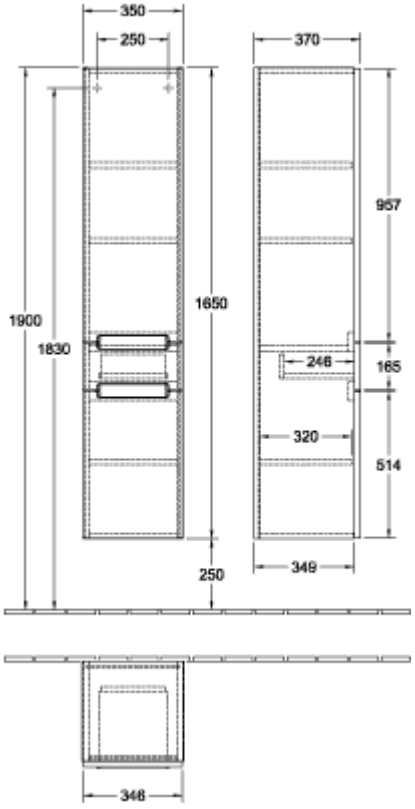
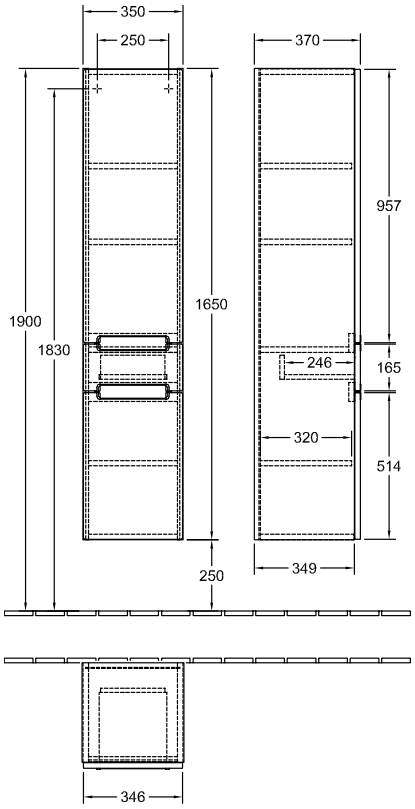
A70800MS