LEGATO VANITY UNIT ANGULAR

PRODUCT INFORMATION

Article title	Villeroy & Boch Legato Vanity unit, with lighting, 2 pull-out compartments, 1400 x 380 x 500 mm, Glossy White / Glossy White
Article number	B589L0DH
Assembly / Assembly type	wall-mounted
Type of opening	2 pull-out compartments
Equipment	2 x wide glass drawer divider , 4 x narrow glass drawer divider 2 x accessory box L 2 x pull-out compartment with non-slip mat
Scope of delivery	1 x vanity unit , 1 x fastening set
Position of washbasin	washbasin on right
Furniture with tap hole	Tap hole pre-drilled at the factory
Depth in mm	500
Width in mm	1400
Height in mm	380
Collection	Legato
Suitable for	selected surface-mounted washbasins
Function	• with SoftClosing • with lighting
Material front	MDF
Surface of front	Acrylic film
Material body	MDF
Surface of body	Acrylic film
Material cover panel	Chipboard
Shape	Angular
Colour designation	Glossy White
Colour designation of cover panel	Glossy White
With lighting	Yes
Smart home compatible	No

TECHNICAL DRAWINGS

B589L0DH

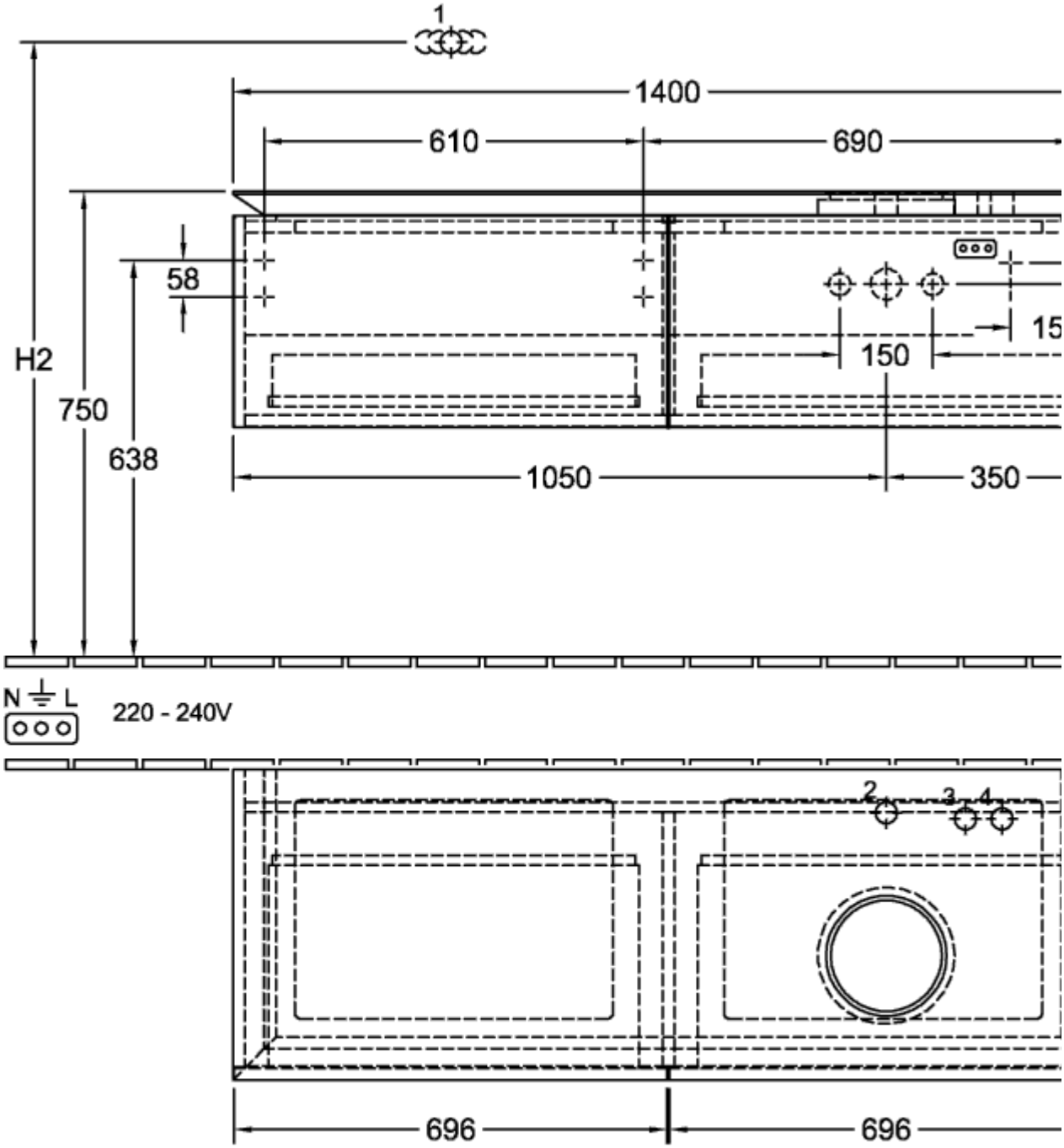

B589L0DH

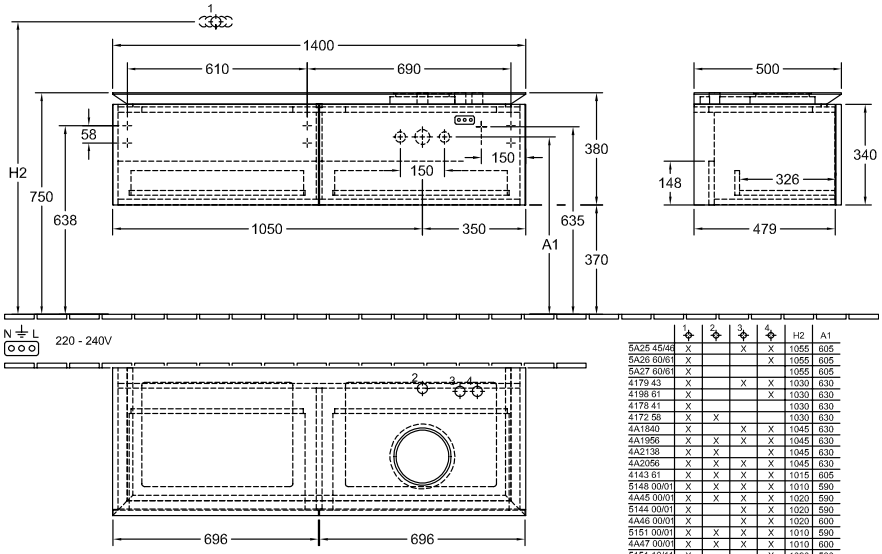

	1	2	3	4	H2	A1
5A25 45/46	X		X	X	1055	605
5A26 60/61	X			X	1055	605
5A27 60/61	X				1055	605
4179 43	X		X	X	1030	630
4198 61	X			X	1030	630
4178 41	X				1030	630
4172 58	X	X			1030	630
4A1840	X		X	X	1045	630
4A1956	X	X	X	X	1045	630
4A2138	X	X		X	1045	630
4A2056	X	X	X	X	1045	630
4143 61	X	X	X	X	1015	605
5148 00/01	X	X	X	X	1010	590
4A45 00/01	X	X	X	X	1020	590
5144 00/01	X		X	X	1020	590
4A46 00/01	X		X	X	1020	600
5151 00/01	X	X	X	X	1010	590
4A47 00/01	X	X	X	X	1010	600
5151 10/11	X			X	1020	590
4A48 00/01	X			X	1020	600
5154 00/01	X	X			1010	590
4A49 00/01	X	X			1020	600
4A50 00/01	X				1015	595
4110 60	X	X			1005	595