LEGATO VANITY UNIT ANGULAR

PRODUCT INFORMATION

Article title	Villeroy & Boch Legato Vanity unit, 2 pull-out compartments, 1400 x 380 x 500 mm, White Wood / White Wood
Article number	B61300E8
Assembly / Assembly type	wall-mounted
Type of opening	2 pull-out compartments
Equipment	2 x wide glass drawer divider , 4 x narrow glass drawer divider 2 x accessory box L 2 x pull-out compartment with non-slip mat
Scope of delivery	1 x vanity unit , 1 x fastening set
Position of washbasin	washbasin on left
Depth in mm	500
Width in mm	1400
Height in mm	380
Collection	Legato
Tap fitting / Tap hole information	• no 3-hole tap fitting possible • tap holes punched out
Suitable for	selected washbasins
Function	with SoftClosing
Material front	Chipboard
Surface of front	Direct coating
Material body	Chipboard
Surface of body	Direct coating
Material cover panel	Chipboard
Shape	Angular
Colour designation	White Wood
Colour designation of cover panel	White Wood
With lighting	No
Smart home compatible	No

TECHNICAL DRAWINGS

B61300E8

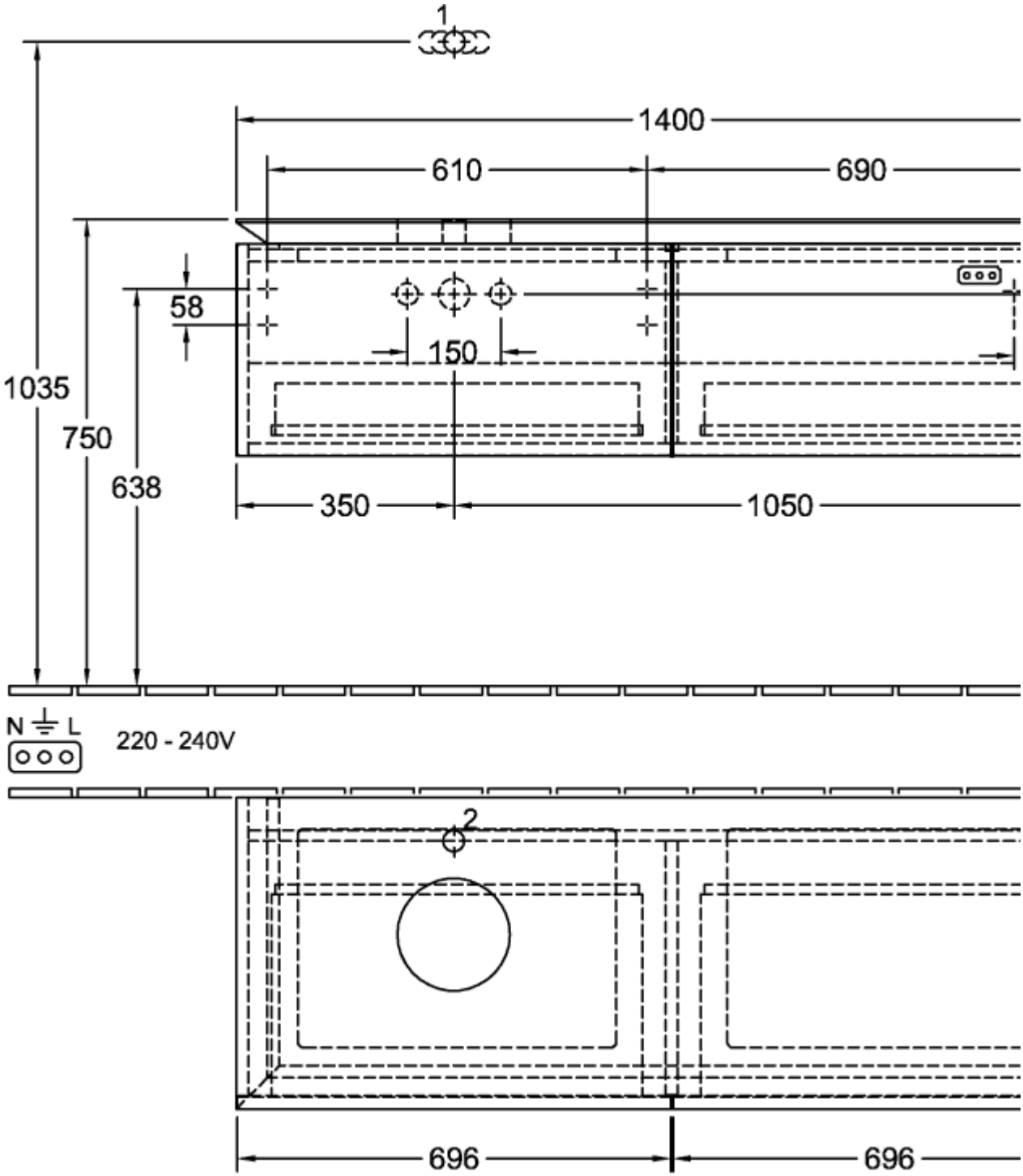

B61300E8

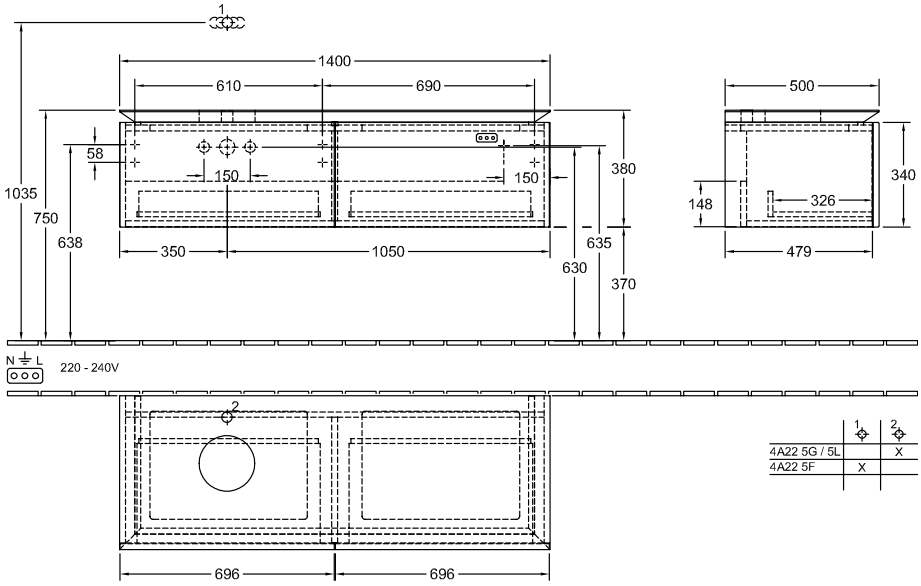

	1	2
4A22 5G / 5L		X
4A22 5F	X	