# LEGATO VANITY UNIT ANGULAR

## PRODUCT INFORMATION

| | |
|---|---|
| Article title | Villeroy & Boch Legato Vanity unit, with lighting, 2 pull-out compartments, 800 x 550 x 500 mm, Glossy White / Glossy White |
| Article number | B679L0DH |
| Assembly / Assembly type | wall-mounted |
| Type of opening | 2 pull-out compartments |
| Equipment | 1 x wide glass drawer divider , 2 x narrow glass drawer divider 1 x accessory box L 2 x pull-out compartment with non-slip mat |
| Scope of delivery | 1 x vanity unit , 1 x fastening set |
| Position of washbasin | washbasin on the middle |
| Depth in mm | 500 |
| Width in mm | 800 |
| Height in mm | 550 |
| Collection | Legato |
| Tap fitting / Tap hole information | no 3-hole tap fitting possible |
| Suitable for | selected washbasins |
| Function | • with SoftClosing<br>• with lighting |
| Material front | MDF |
| Surface of front | Acrylic film |
| Material body | MDF |
| Surface of body | Acrylic film |
| Material cover panel | Chipboard |
| Shape | Angular |
| Colour designation | Glossy White |
| Colour designation of cover panel | Glossy White |
| With lighting | Yes |
| Smart home compatible | No |

## TECHNICAL DRAWINGS

**B679L0DH**

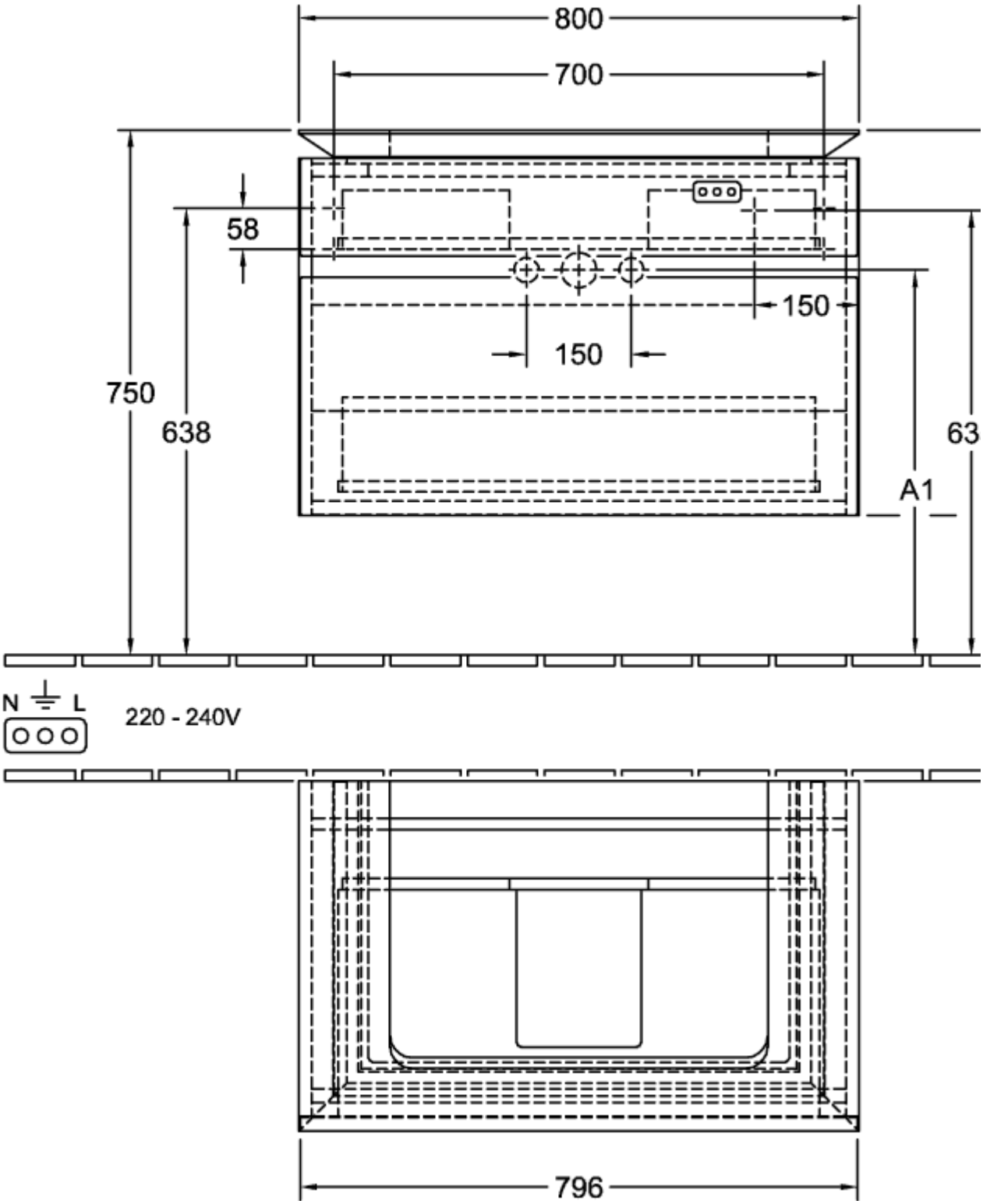

# B679L0DH

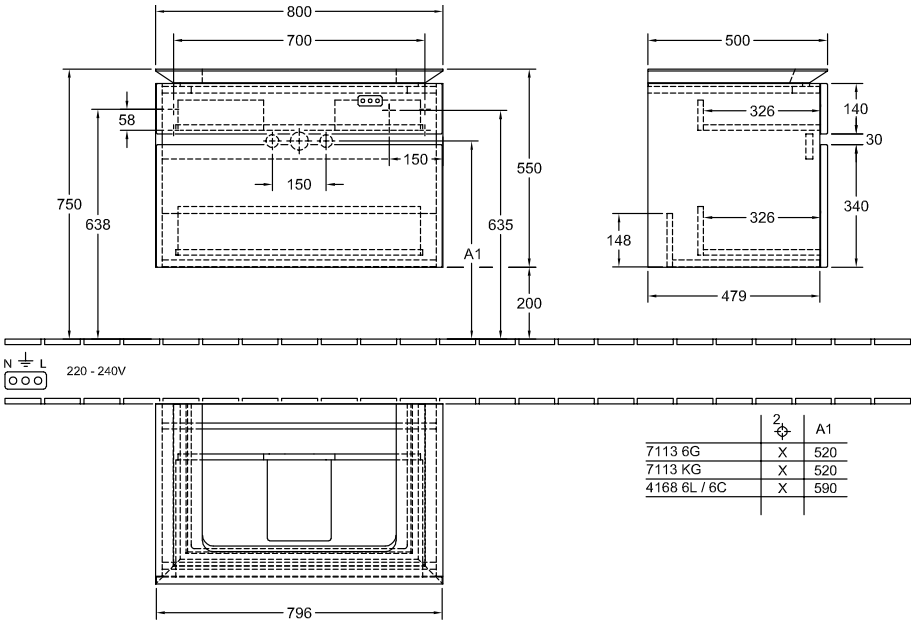


| | 2 | A1 |
|---|---|---|
| 7113 6G | X | 520 |
| 7113 KG | X | 520 |
| 4168 6L / 6C | X | 590 |