FINION VANITY UNIT ANGULAR

PRODUCT INFORMATION

Article title	Villeroy & Boch Finion Vanity unit, with lighting, 2 pull-out compartments, 1000 x 603 x 501 mm, Glossy White Lacquer / Glossy White Lacquer / Glass White Matt
Article number	G781GFGF
Assembly / Assembly type	wall-mounted
Type of opening	2 pull-out compartments
Equipment	1 x wide glass drawer divider , 2 x pull-out compartment with non-slip mat 3 x narrow glass drawer divider 1 x accessory box S 1 x accessory box M
Scope of delivery	1 x vanity unit , 1 x fastening set
Position of washbasin	washbasin on the middle
Furniture with tap hole	with drilled tap holes
Position of shelf unit	right
Depth in mm	501
Width in mm	1000
Height in mm	603
Collection	Finion
Suitable for	selected surface-mounted washbasins
Function	• with SoftClosing • with lighting • with push-to-open function
Material front	MDF
Surface of front	Paint
Material body	MDF
Surface of body	Paint
Material shelf element	MDF
Surface of shelf unit	Paint
Material cover panel	MDF
Shape	Angular
Colour designation	Glossy White Lacquer
Colour designation of shelf unit	Glossy White Lacquer
Colour designation of cover panel	Glass White Matt
With lighting	Yes
Smart home compatible	No

TECHNICAL DRAWINGS

G781GFGF

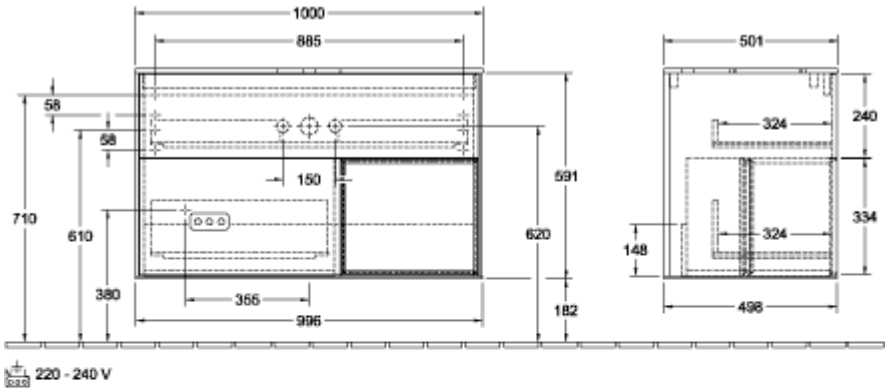

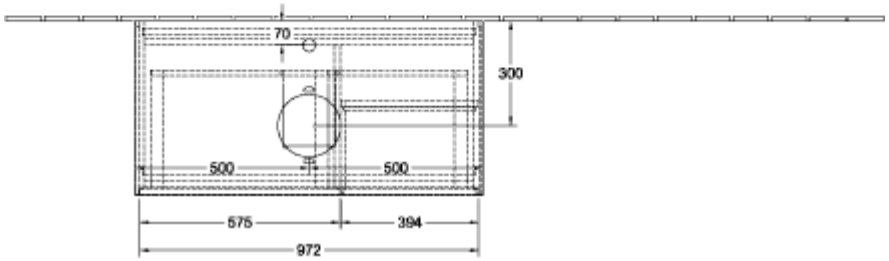
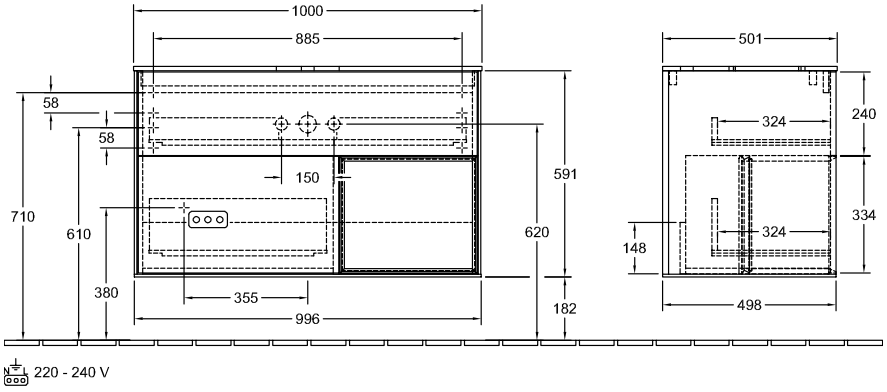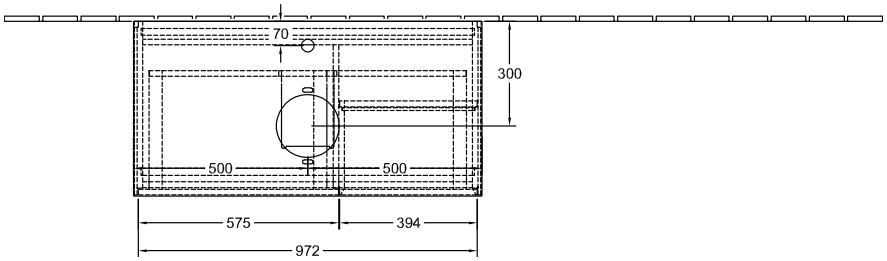
G781GFGF