# LOOP & FRIENDS SPECIAL BATH SPECIAL SHAPE

## PRODUCT INFORMATION

| | |
|---|---|
| Article title | Villeroy & Boch Loop & Friends Special bath SQUARE, 1750 x 1350 mm, White Alpin |
| Article number | UBA175LFS9REV-01 |
| Assembly / Assembly type | Corner installation |
| Scope of delivery | 1 x special form bath |
| Length in mm | 1750 |
| Width in mm | 1350 |
| Height in mm | 465 |
| Interior depth | 440 |
| Collection | Loop & Friends |
| Material | Acrylic |
| Colour name | White Alpin |
| With overflow | Yes |
| Number of people | 2 |
| Shape | Special shape |
| Colour designation | White Alpin |
| With slip resistance | No |
| Outlet / outlet | central outlet |
| Interior form | trapezoid |
| SilentFlow | No |

## TECHNICAL DRAWINGS

### UBA175LFS9REV-01

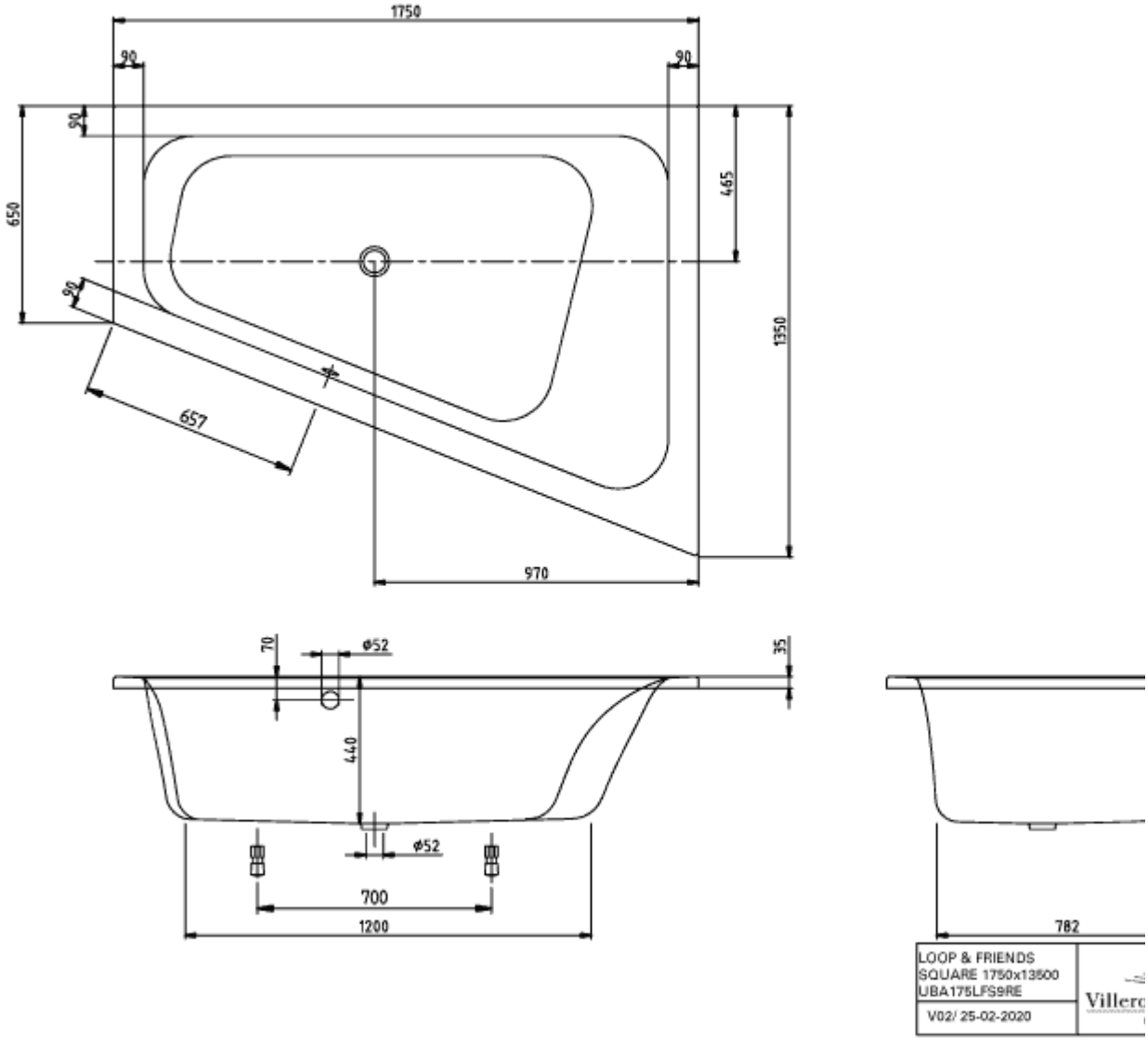
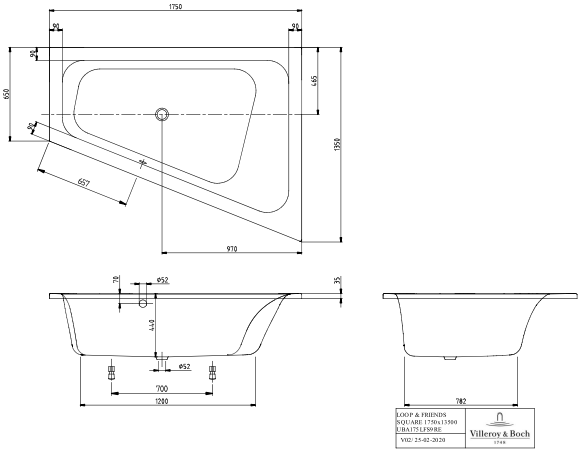
# UBA175LFS9REV-01