SQUARO EDGE 12 RECTANGULAR BATH RECTANGLE

PRODUCT INFORMATION

Article title	Villeroy & Boch Squaro Edge 12 Rectangular bath, 1600 x 750 mm, White Alpin
Article number	UBQ160SQE2DV-01
Assembly / Assembly type	built-in installation
Scope of delivery	1 x rectangular bath , 2 x bath support frame (self-adhesive), adjustable from 130 - 180 mm 1 x extended outlet and overflow (chrome-plated and white)
Length in mm	1600
Width in mm	750
Height in mm	475
Interior depth	450
Collection	Squaro Edge 12
Material	Quaryl®
Colour name	White Alpin
Other material	• Waste/overflow combination: Plastic • Plastic Outlet cover: Plastic • Plastic
Other surfaces	Waste/overflow combination: glossy, glossy, Outlet cover: glossy| glossy
With overflow	Yes
Number of people	2
Shape	Rectangle
Colour designation	White Alpin
Other colour designations	Waste/overflow combination: Chrome, White Alpin, Outlet cover: Chrome|White Alpin
With slip resistance	No
Outlet / outlet	central outlet
Interior form	rectangular
SilentFlow	No

TECHNICAL DRAWINGS

UBQ160SQE2DV-01

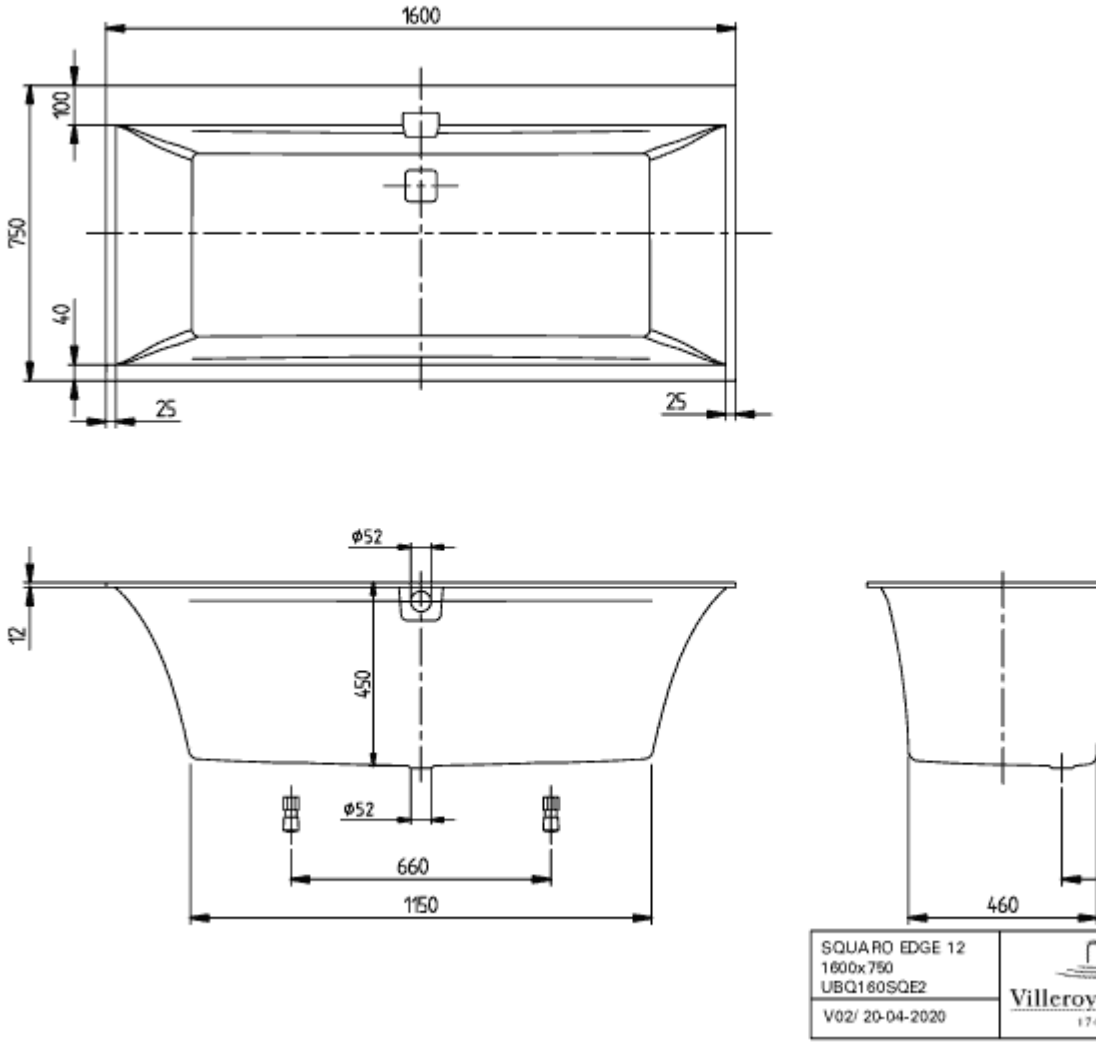
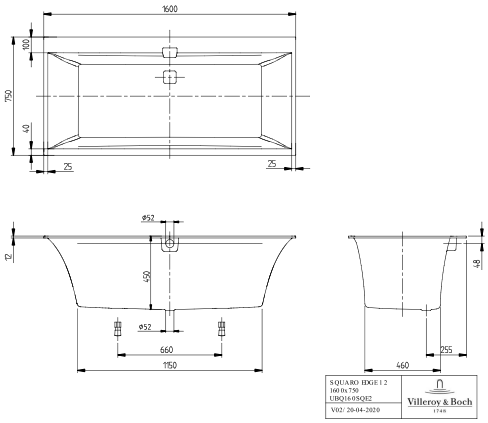
UBQ160SQE2DV-01