FINION FREE-STANDING BATH FREE-STANDING

PRODUCT INFORMATION

Article title	Villeroy & Boch Finion Free-standing bath ColourOnDemand, 1700 x 700 mm, Stone White
Article number	UBQ177FIN7N3BCV3RW
Assembly / Assembly type	freestanding
Scope of delivery	1 x free-standing bath , 1 x push-to-open valve 1 x overflow
Length in mm	1700
Width in mm	700
Height in mm	620
Interior depth	480
Collection	Finion
Material	Quaryl®
Colour name	Stone White
Other material	Waste/overflow combination: Plastic Outlet cover: Plastic
Other surfaces	Waste/overflow combination: glossy, Outlet cover: glossy
With overflow	Yes
Number of people	2
Design Awards	iF Product Design Award 2017
Shape	Free-standing
Colour designation	Stone White
Other colour designations	Waste/overflow combination: Gold, Outlet cover: Gold
With slip resistance	No
Outlet / outlet	central outlet
Interior form	rectangular
SilentFlow	No

TECHNICAL DRAWINGS

UBQ177FIN7N3BCV3RW

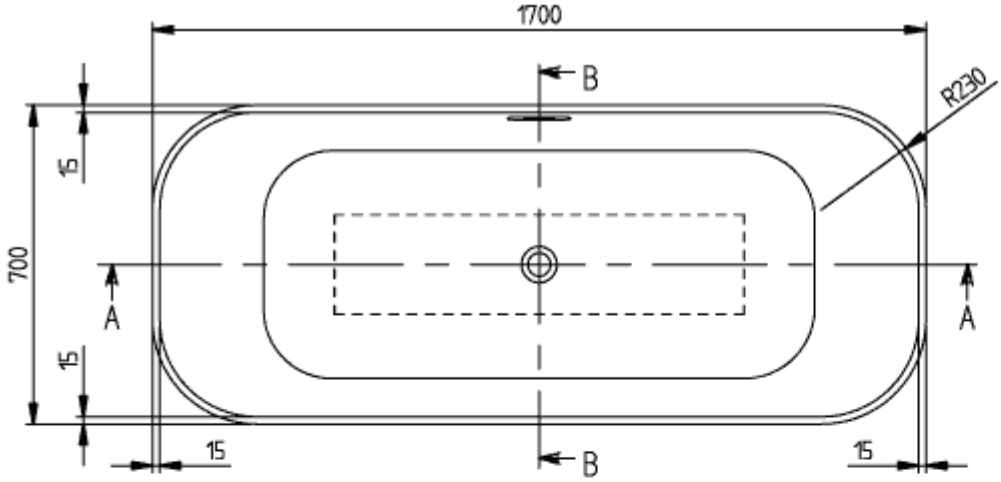

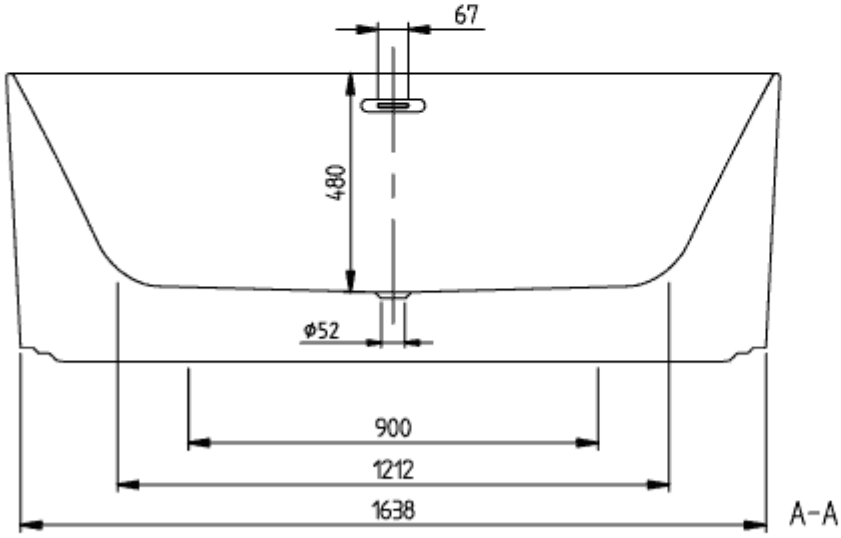

FINION 1700x700
UBQ177FIN7

V02/ 25-02-2020
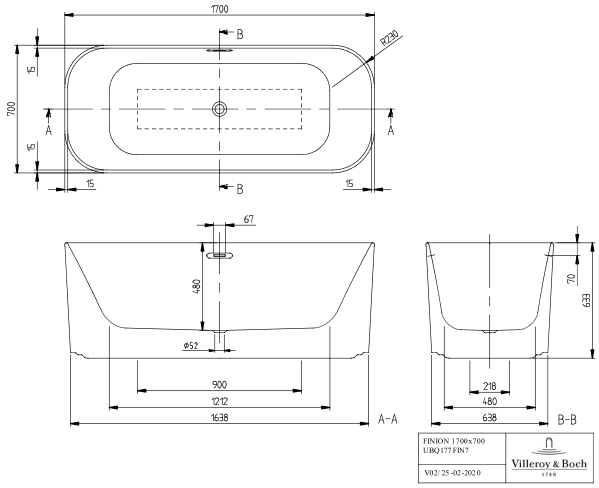
UBQ177FIN7N3BCV3RW