# ARCHITECTURA RECTANGULAR SHOWER TRAY RECTANGLE

## PRODUCT INFORMATION

| | |
|---|---|
| Article title | Villeroy & Boch Architectura Rectangular shower tray, 1000 x 750 x 48 mm, White Alpin |
| Article number | UDA1075ARA248V-01 |
| Assembly / Assembly type | Surface-mounted, Corner installation\|flush-fitting installation\| Installation on a base |
| Assembly instructions | The installation height of the shower tray can be reduced by 30 mm if the Viega outlet fitting art. no. 634 100 is used. Please note: this outlet fitting does not conform to EN 274. |
| Scope of delivery | 1 x rectangular shower tray , 1 x outlet cover in White Alpine (01), for matt colours, outlet cover in matching matt colours. |
| Length in mm | 1000 |
| Width in mm | 750 |
| Height in mm | 48 |
| Interior depth | 14 |
| Collection | Architectura |
| Material | Acrylic |
| Colour name | White Alpin |
| Other material | Outlet cover: Acrylic |
| Other surfaces | Outlet cover: glossy |
| Shape | Rectangle |
| Colour designation | White Alpin |
| Other colour designations | Outlet cover: White Alpin |
| Antibacterial surface (with AntiBac) | No |
| Easy surface cleaning (CeramicPlus) | No |
| With slip resistance | No |

## TECHNICAL DRAWINGS

**UDA1075ARA248V-01**

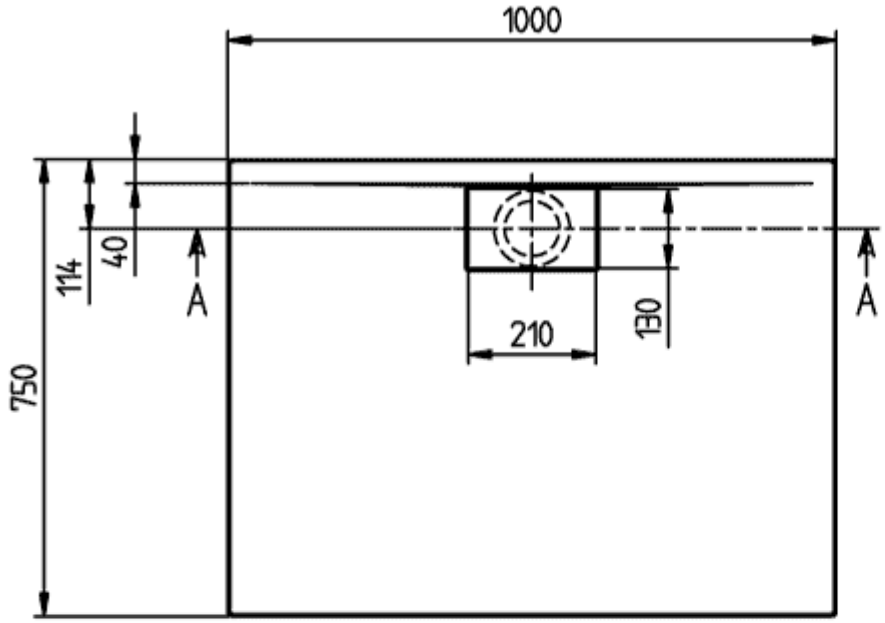


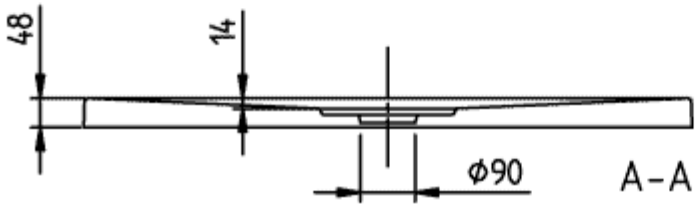


ARCHITECTURA METAL
RIM 1000x750
UDA1075ARA248
V02 / 31-03-2021

# UDA1075ARA248V-01

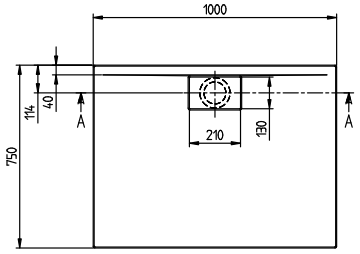


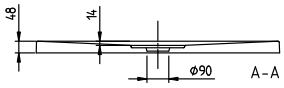


| | |
|---|---|
| ARCHITECTURA METAL<br>RIM 1000x750<br>UDA1075ARA248 | Villeroy & Boch<br>1748 |
| V02 / 31-03-2021 | |