ARTIS SURFACE-MOUNTED WASHBASIN SQUARE

PRODUCT INFORMATION

Article title	Villeroy & Boch Artis Surface-mounted washbasin, 410 x 410 x 130 mm, White Alpin, without overflow
Article number	41784101
Assembly / Assembly type	Surface-mounted
Scope of delivery	1 x surface-mounted washbasin , 1 x fastening set 1 x cut-out template
Depth in mm	410
Width in mm	410
Height in mm	130
Interior depth	105
Collection	Artis
Tap fitting / Tap hole information	Please note: unclosable outlet valve must be used with models without overflow
Suitable for	Wall-mounted tap fittings, Matching Villeroy&Boch furniture|Tap fitting with raised base
Material	TitanCeram
surface	glossy
Colour name	White Alpin
With overflow	No
Shape	Square
Colour designation	White Alpin
Antibacterial surface (with AntiBac)	No
Easy surface cleaning (CeramicPlus)	No
Underside of washbasin	unground
Number of bowls	1

TECHNICAL DRAWINGS

41784101

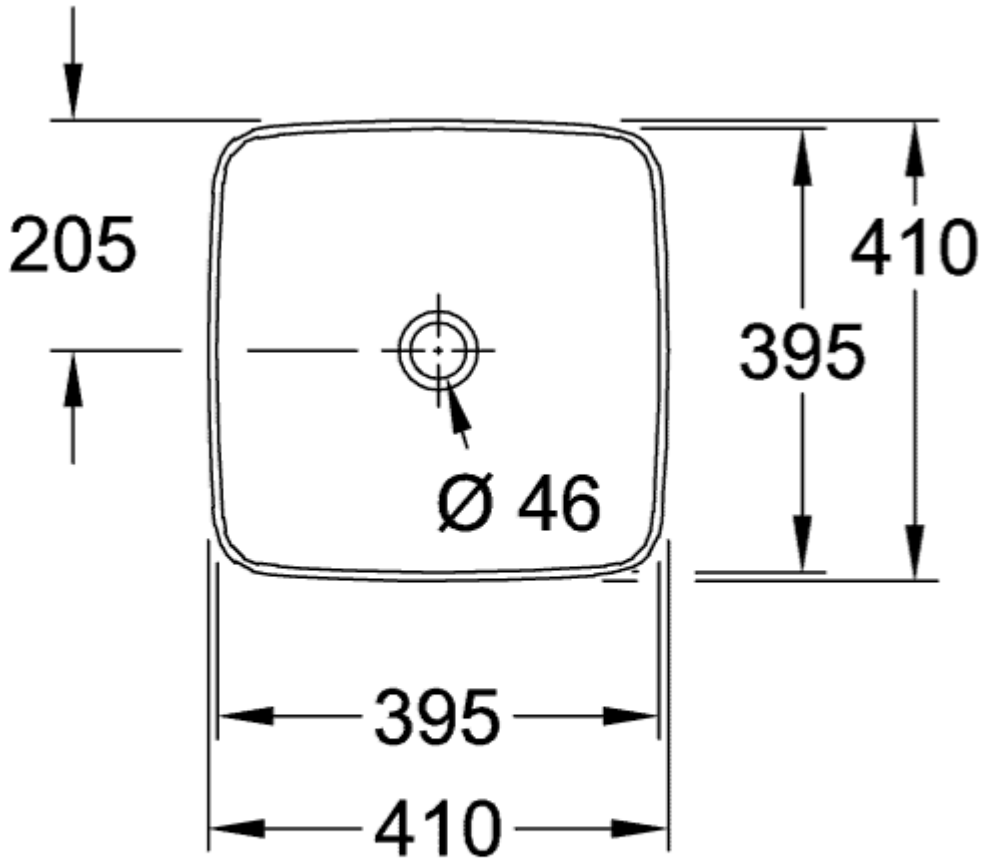
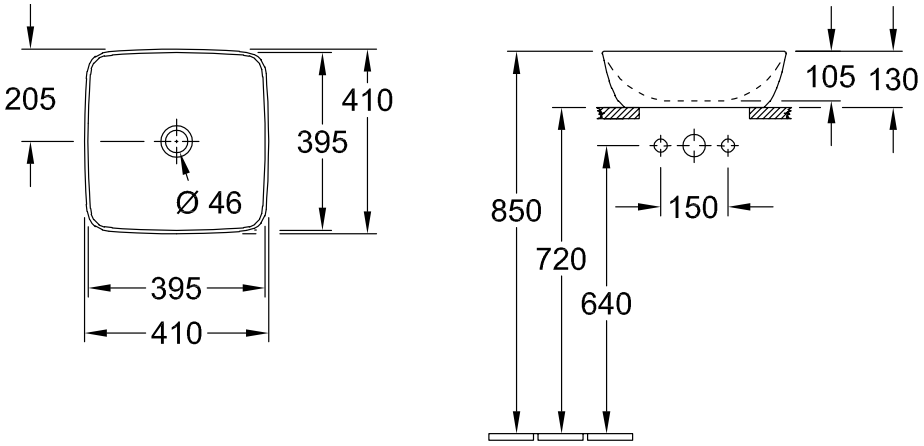
41784101