ARCHITECTURA WASHBASIN RECTANGLE

PRODUCT INFORMATION

Article title	Villeroy & Boch Architectura Washbasin, 600 x 470 x 180 mm, White Alpin, with overflow
Article number	41886001
Assembly / Assembly type	wall-mounted
Scope of delivery	1 x washbasin
Depth in mm	470
Width in mm	600
Height in mm	180
Interior depth	125
Collection	Architectura
Suitable for	3-hole mixer
Material	Sanitary ceramics
surface	glossy
Colour name	White Alpin
With overflow	Yes
Shape	Rectangle
Colour designation	White Alpin
Antibacterial surface (with AntiBac)	No
Easy surface cleaning (CeramicPlus)	No
Number of tap holes punched through	1
Number of tap holes pre-drilled	2
Number of bowls	1

TECHNICAL DRAWINGS

41886001

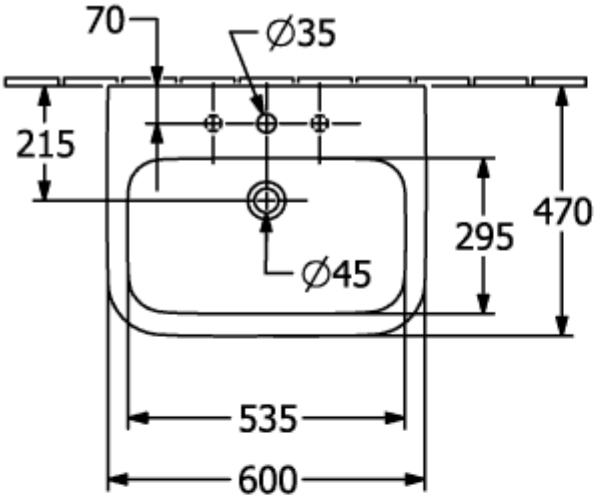

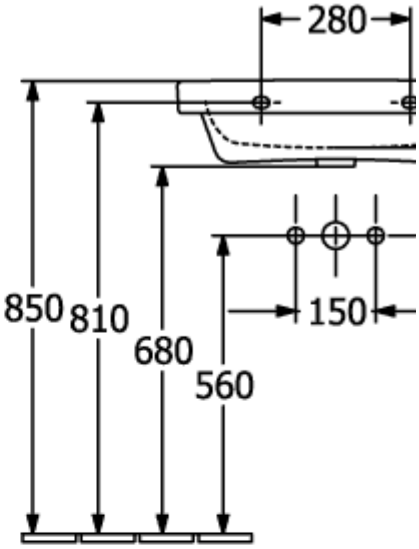

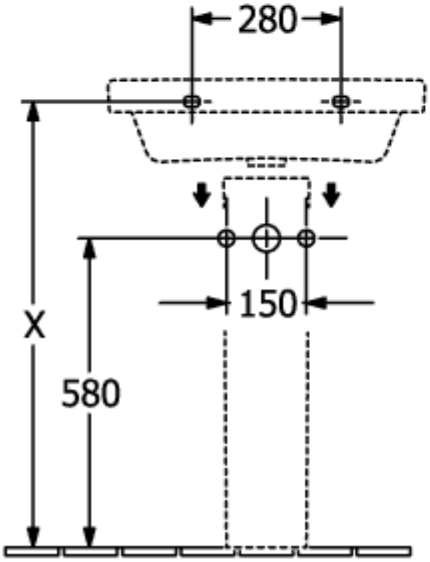

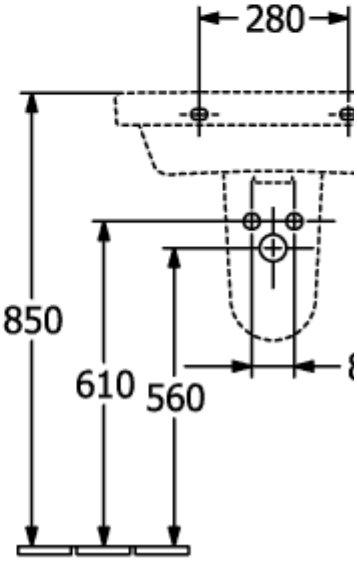

41886001

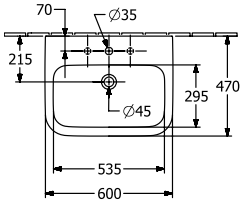
70
∅35
215
295
470
∅45
535
600

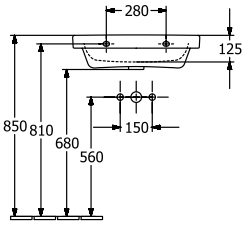
280
125
850
810
680
560
150

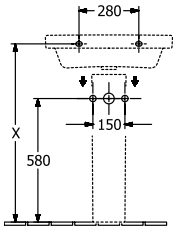
280
X
580
150

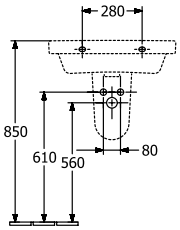
280
850
610
560
80