O.NOVO WASHOUT TOILET OVAL

PRODUCT INFORMATION

Article title	Villeroy & Boch O.novo Washout toilet, wall-mounted, White Alpin
Article number	56621001
Assembly / Assembly type	wall-mounted
Scope of delivery	1 x washout toilet
Depth in mm	560
Width in mm	360
Height in mm	380
Collection	O.novo
Suitable for	Concealed cistern
Innovative flushing technology (with TwistFlush)	No
Flush volume l	3 / 6 l
Wall-mounted - floor-standing	wall-mounted
Material	Sanitary ceramics
surface	glossy
Colour name	White Alpin
Shape	Oval
Colour designation	White Alpin
Antibacterial surface (with AntiBac)	No
Easy surface cleaning (CeramicPlus)	No
Rimless (mit DirectFlush)	No
Flush type	Wash-out toilet
Integrated freshness solution (with ViFresh)	No
Outlet / outlet	horizontal outlet

TECHNICAL DRAWINGS

56621001

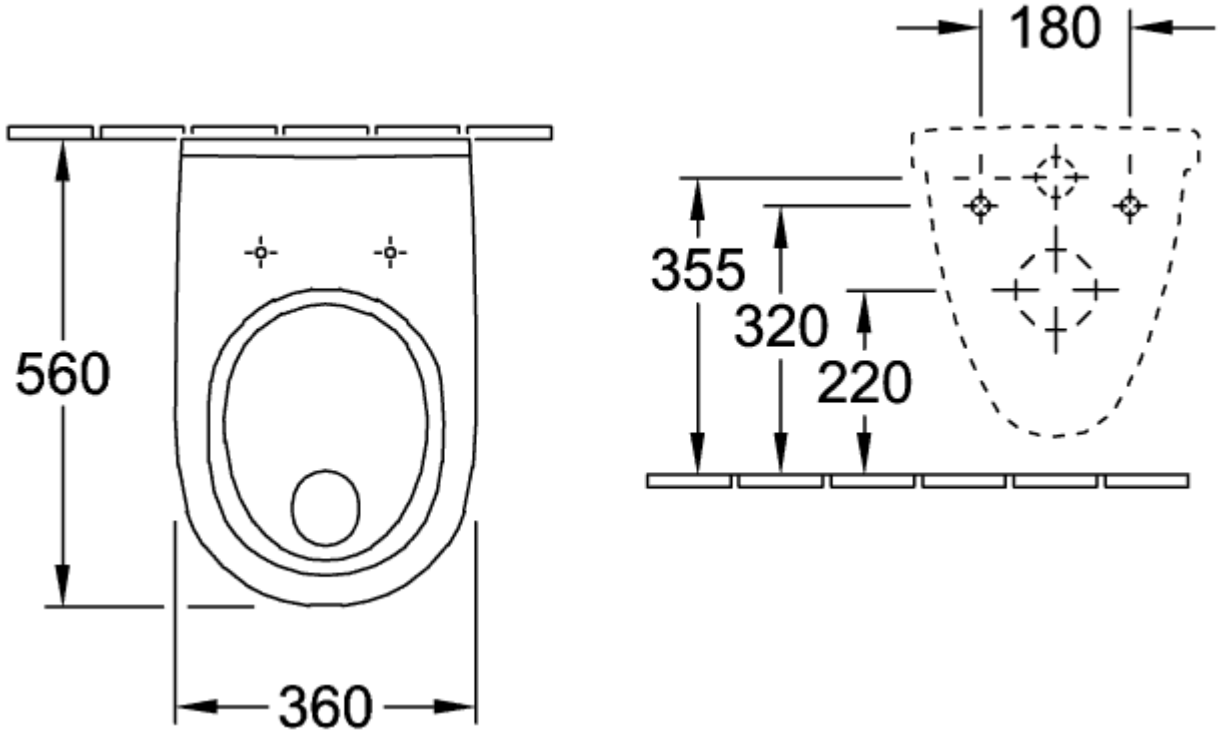
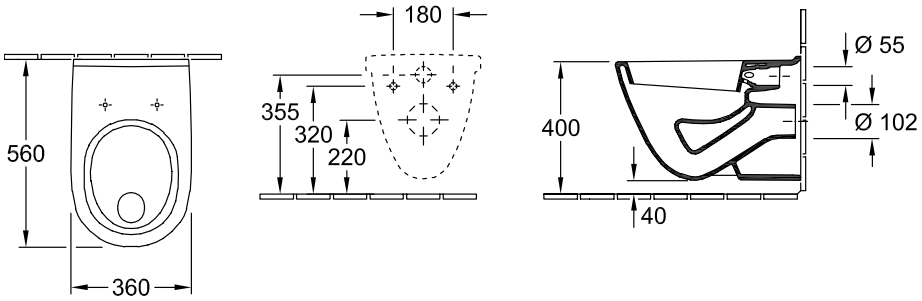
56621001