O.NOVO WASHDOWN TOILET COMPACT OVAL

PRODUCT INFORMATION

Article title	Villeroy & Boch O.novo Washdown toilet compact, wall-mounted, White Alpin
Article number	56881001
Assembly / Assembly type	wall-mounted
Scope of delivery	1 x washdown toilet
Depth in mm	490
Width in mm	360
Height in mm	330
Collection	O.novo
Suitable for	Concealed cistern
Innovative flushing technology (with TwistFlush)	No
Flush volume l	3 / 4,5 l
Wall-mounted - floor-standing	wall-mounted
Material	Sanitary ceramics
surface	glossy
Colour name	White Alpin
Shape	Oval
Colour designation	White Alpin
Antibacterial surface (with AntiBac)	No
Easy surface cleaning (CeramicPlus)	No
Rimless (mit DirectFlush)	No
Flush type	Washdown toilet
Integrated freshness solution (with ViFresh)	No
Outlet / outlet	horizontal outlet

TECHNICAL DRAWINGS

56881001

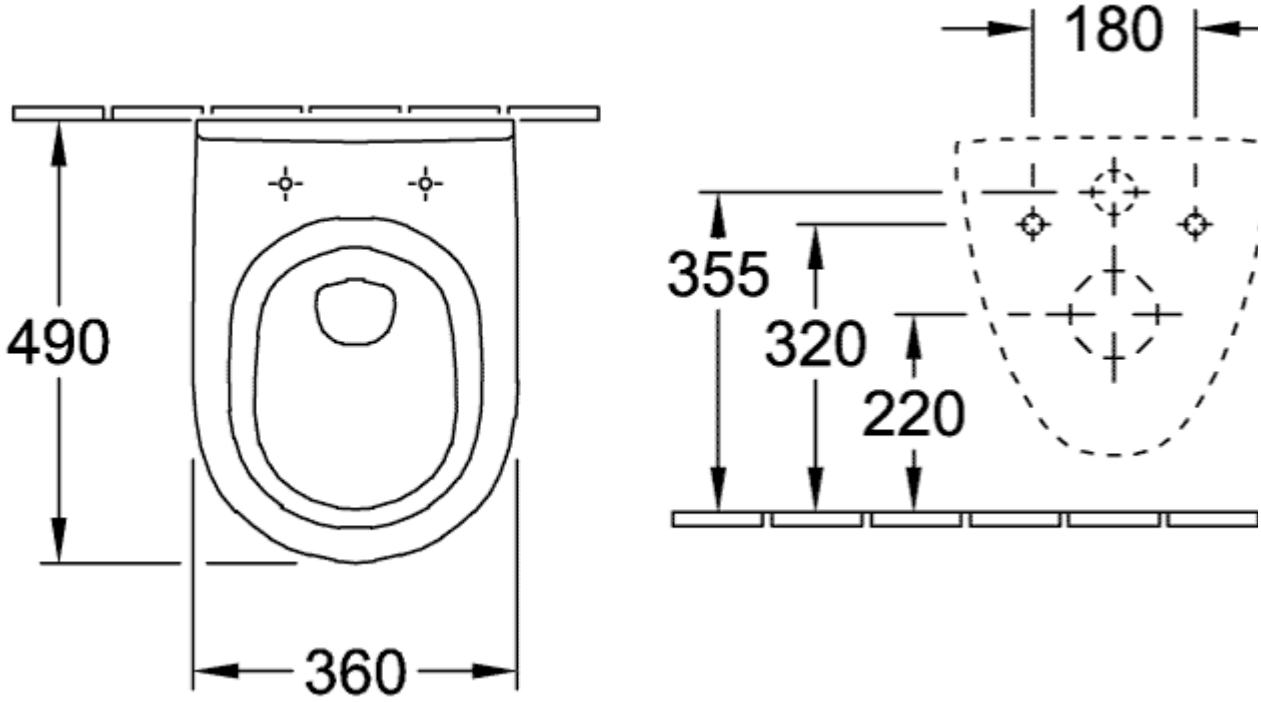
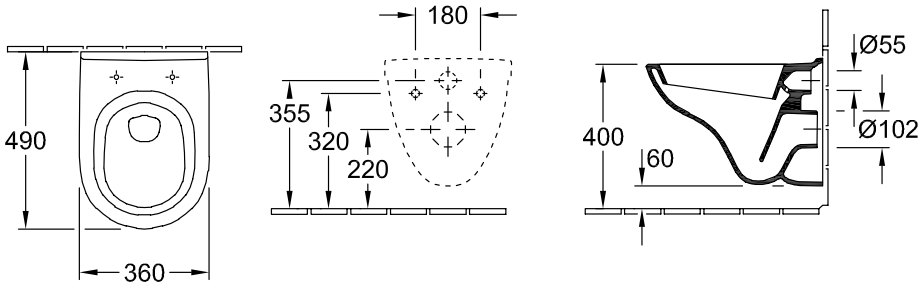
56881001