# SUBWAY 2.0 WASHBASIN RECTANGLE

## PRODUCT INFORMATION

| | |
|---|---|
| Article title | Villeroy & Boch Subway 2.0 Washbasin, 550 x 440 x 150 mm, White Alpin, with overflow |
| Article number | 7113F501 |
| Assembly / Assembly type | wall-mounted |
| Assembly instructions | for installation with furniture Subway 2.0 |
| Scope of delivery | 1 x washbasin |
| Depth in mm | 440 |
| Width in mm | 550 |
| Height in mm | 150 |
| Interior depth | 100 |
| Collection | Subway 2.0 |
| Suitable for | 3-hole mixer, Matching Villeroy&Boch furniture |
| Material | Sanitary ceramics |
| surface | glossy |
| Colour name | White Alpin |
| With overflow | Yes |
| Shape | Rectangle |
| Colour designation | White Alpin |
| Antibacterial surface (with AntiBac) | No |
| Easy surface cleaning (CeramicPlus) | No |
| Number of tap holes punched through | 1 |
| Number of tap holes pre-drilled | 2 |
| Number of bowls | 1 |

## TECHNICAL DRAWINGS

**7113F501**

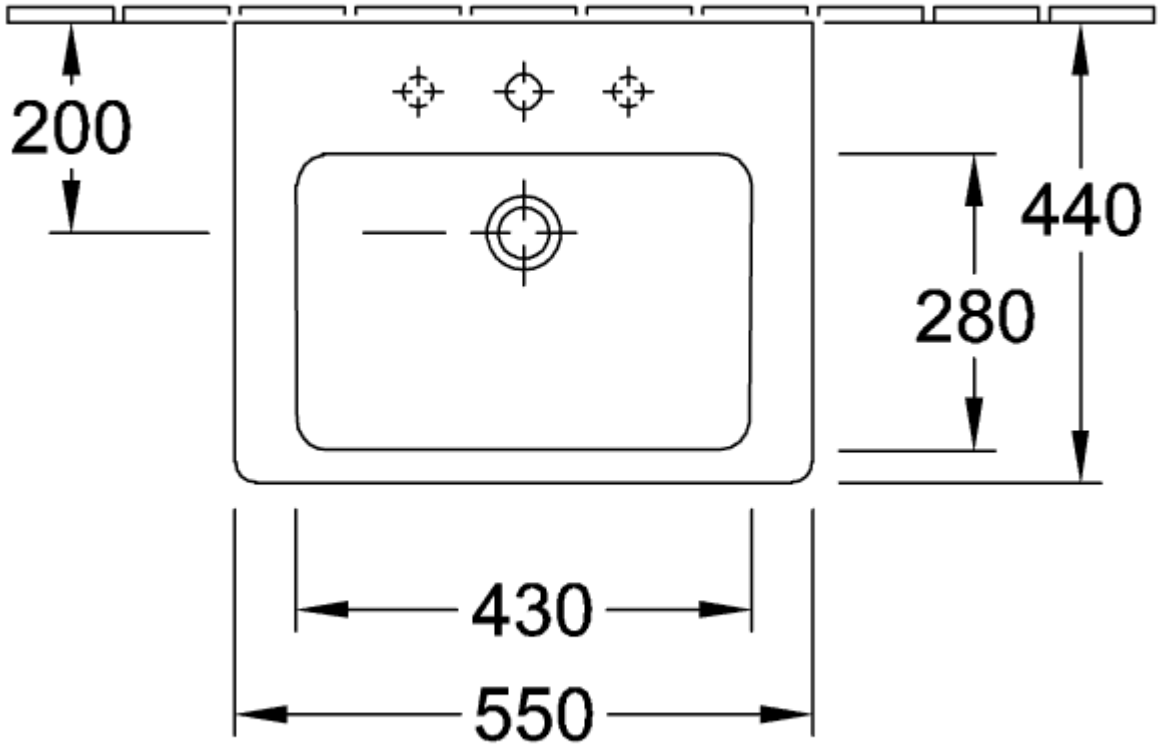
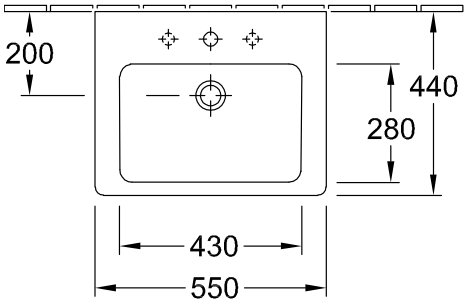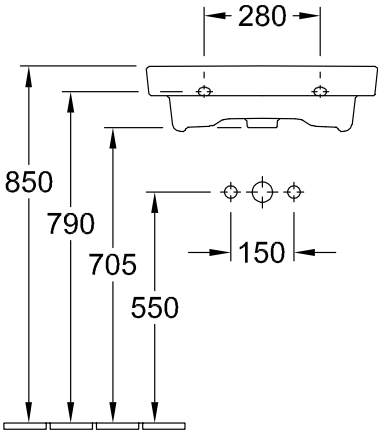
**7113F501**