ACCESSORIES VARIO DRAINBEND

PRODUCT INFORMATION

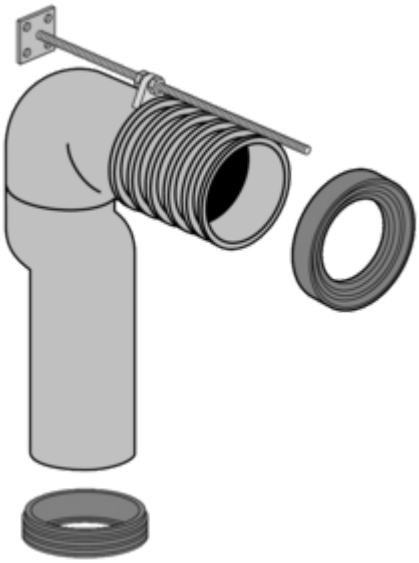

Article title	Villeroy & Boch Accessories Vario drainbend, 380 x 550 x 120 mm
Article number	87110000
Scope of delivery	1 x Vario drainbend , 1 x fastening set
Depth in mm	550
Width in mm	380
Height in mm	120
Diameter in mm	100
Collection	Accessories
Material	Plastic