ACCESSORIES EXTRACTOR

PRODUCT INFORMATION

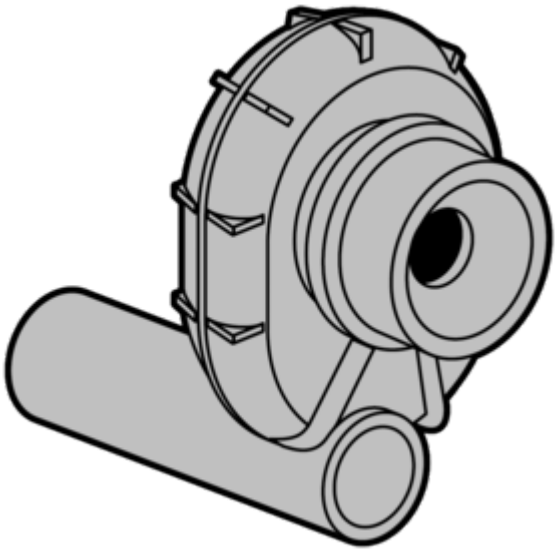

Article title	Villeroy & Boch Accessories Extractor, 123 x 204 x 95,5 mm
Article number	93260000
Scope of delivery	1 x extractor
Depth in mm	204
Width in mm	123
Height in mm	95,5
Diameter in mm	50
Collection	Accessories
Material	Plastic