LOOP & FRIENDS FREE-STANDING BATH FREE-STANDING

PRODUCT INFORMATION

Article title	Villeroy & Boch Loop & Friends Free-standing bath SQUARE ColourOnDemand, 1800 x 800 mm, White Alpin
Article number	UBA180LFS7PDBCV-01
Assembly / Assembly type	freestanding
Scope of delivery	1 x free-standing bath , 1 x extended outlet and overflow (chrome-plated)
Length in mm	1800
Width in mm	800
Height in mm	465
Interior depth	440
Collection	Loop & Friends
Material	Acrylic
Colour name	White Alpin
Other material	Waste/overflow combination: Plastic Outlet cover: Plastic
Other surfaces	Waste/overflow combination: glossy, Outlet cover: glossy
With overflow	Yes
Number of people	2
Shape	Free-standing
Colour designation	White Alpin
Other colour designations	Waste/overflow combination: Chrome, Outlet cover: Chrome
With slip resistance	No
Outlet / outlet	central outlet
Interior form	rectangular
SilentFlow	No

TECHNICAL DRAWINGS

UBA180LFS7PDBCV-01

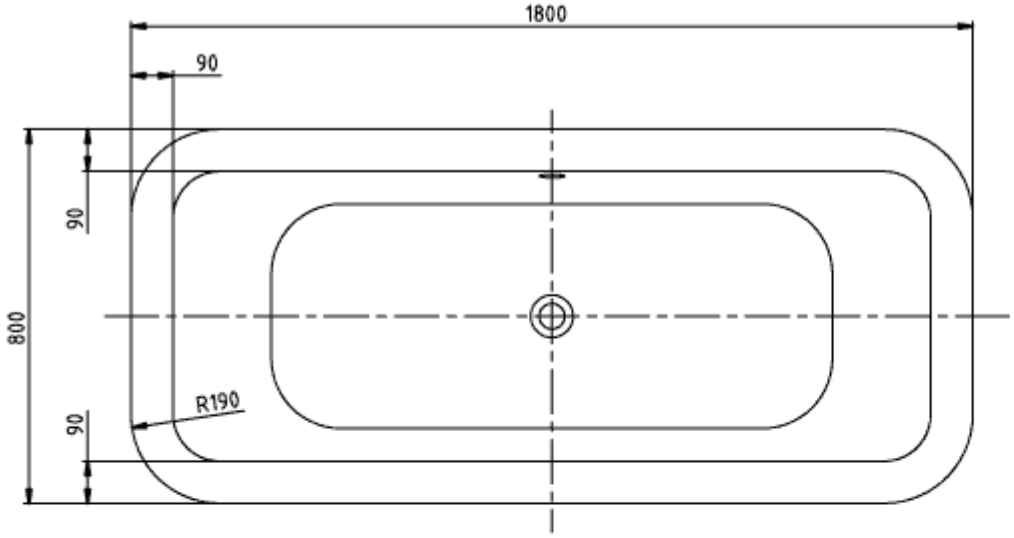

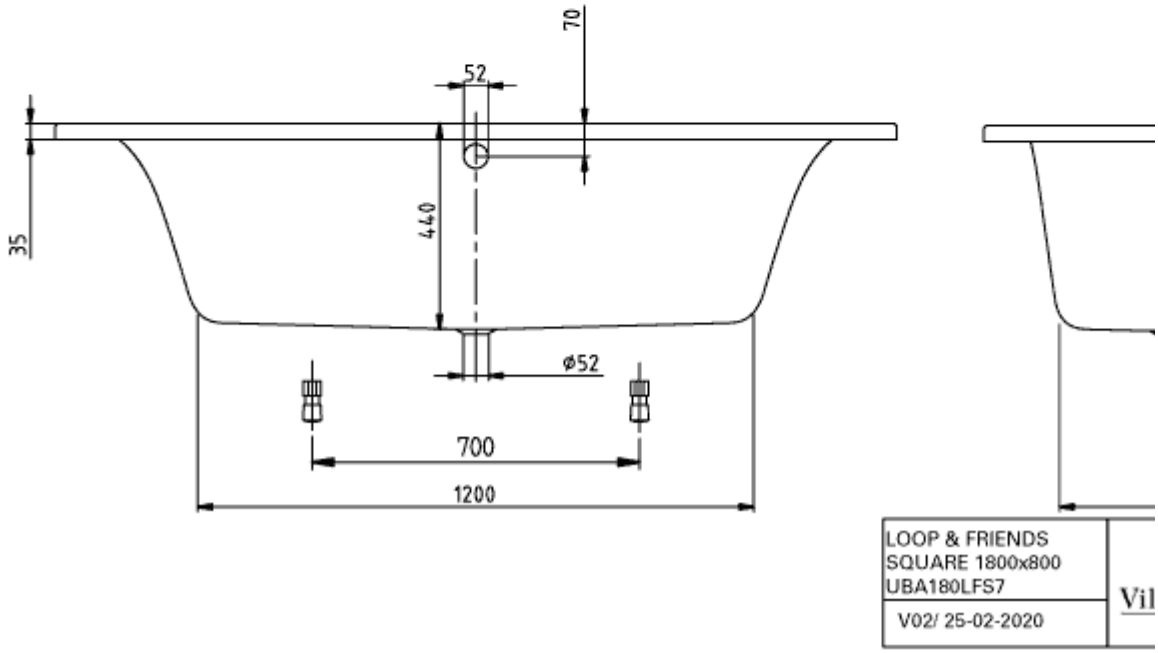

UBA180LFS7PDBCV-01

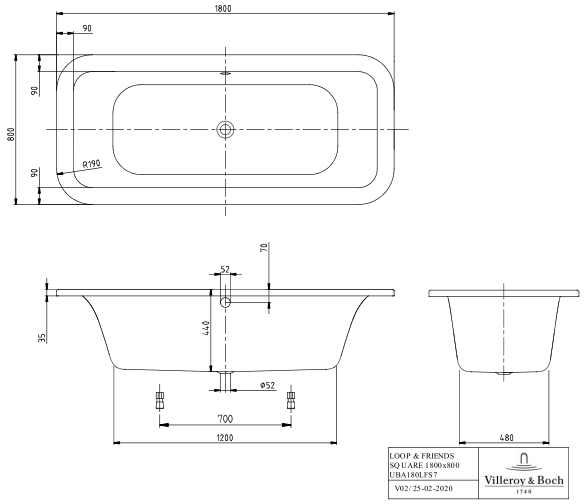

UBA180LFS7PDBCV-01

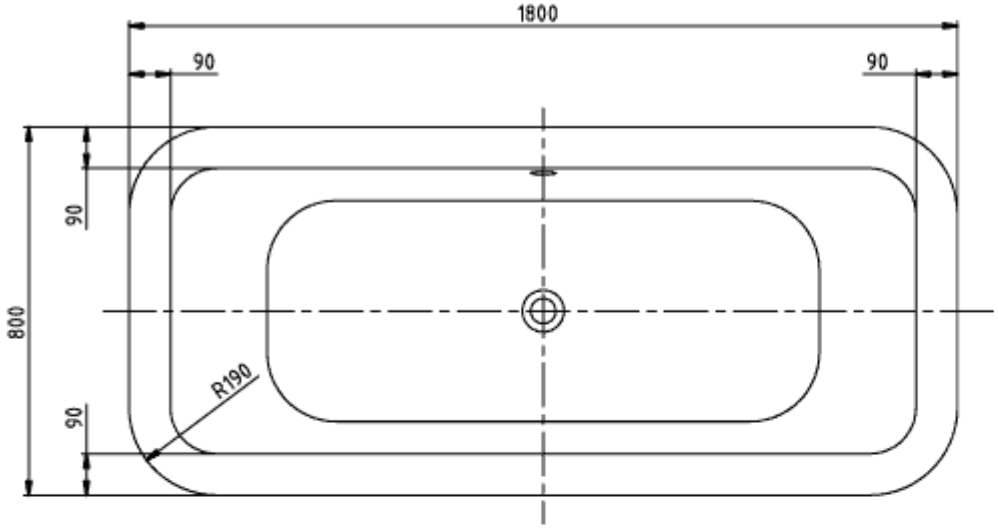

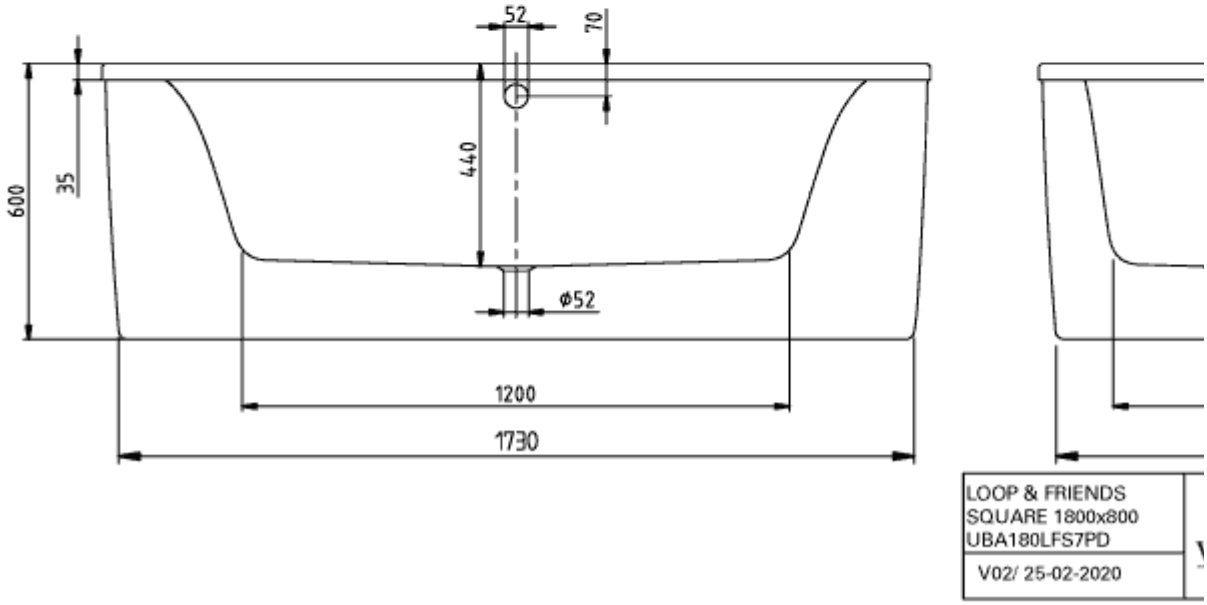
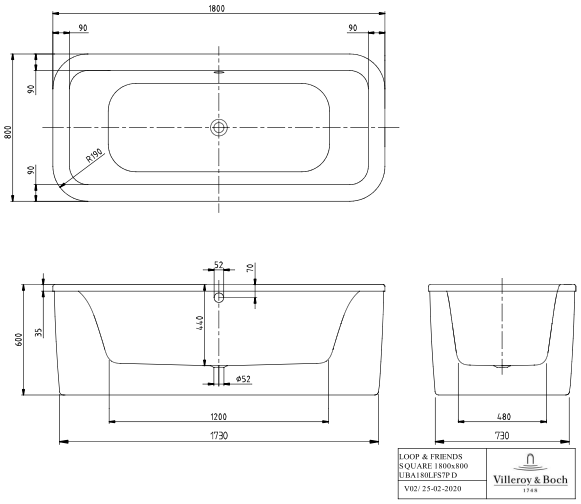
UBA180LFS7PDBCV-01