SOLO CORNER CORNER SINK RECTANGLE

PRODUCT INFORMATION

Article title	Villeroy & Boch Solo corner Corner sink, included Waste system pop-up, Strainer bowl, Espresso glossy
Article number	670802KS
Assembly / Assembly type	surface-mounted installation
Assembly instructions	Installation on a corner undersink cabinet with 90 cm side length.
Scope of delivery	1 x sink , 1 x pop-up waste system 1 x cover cap, round 1 x strainer bowl
Interior depth	185
Collection	Solo corner
Colour name	Espresso glossy
Position of main bowl	Basin centred
Function of the drain fitting	pop-up waste system

TECHNICAL DRAWINGS

670802KS

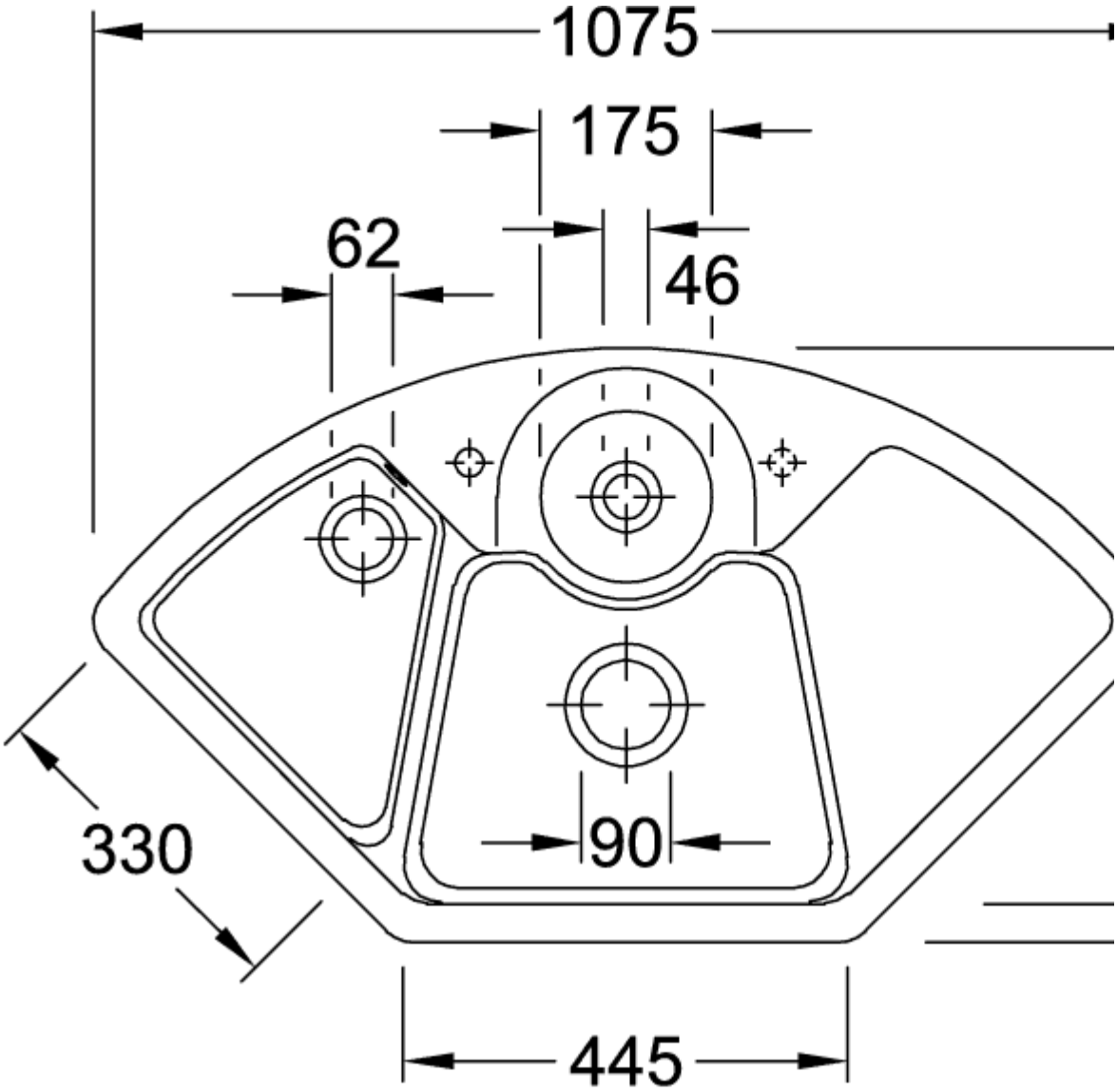
1075
175
62
46
330
90
445

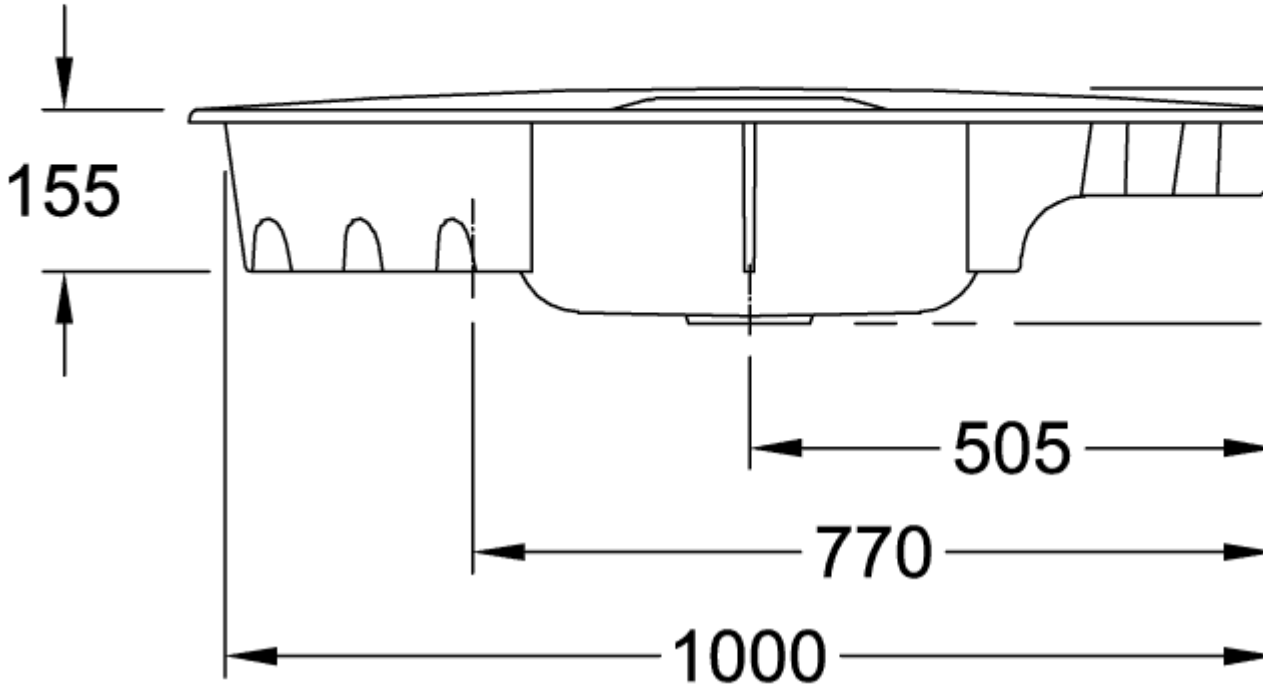
155
505
770
1000
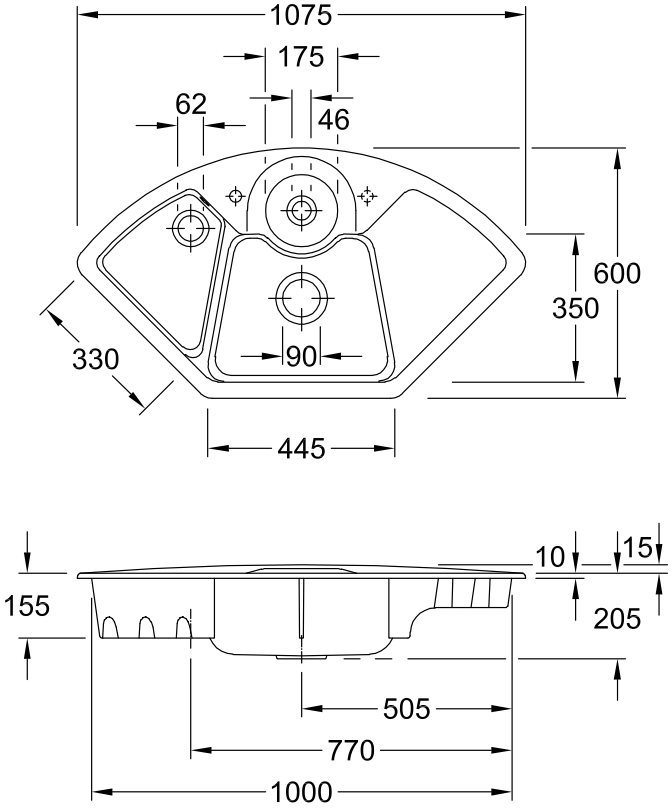
670802KS