SUBWAY STYLE 50 BUILT-IN SINK RECTANGLE

PRODUCT INFORMATION

Article title	Villeroy & Boch Subway Style 50 Built-in sink, included Waste system pop-up, of Ceramic, 900 x 510 mm, White Alpin CeramicPlus
Article number	335102R1
Assembly / Assembly type	surface-mounted installation
Assembly instructions	minimum unit width: 50 cm
Scope of delivery	1 x sink , 1 x pop-up waste system 1 x cover cap, round
Length in mm	510
Width in mm	900
Height in mm	220
Interior depth	200
Collection	Subway Style 50
Material	Ceramic
Colour name	White Alpin CeramicPlus
Other material	Grate: Stainless steel Valve: Stainless steel
Position of main bowl	Basin on right
Function of the drain fitting	pop-up waste system
Colour designation	White Alpin
Other colour designations	Grate: Chrome, Valve: Chrome

TECHNICAL DRAWINGS

335102R1

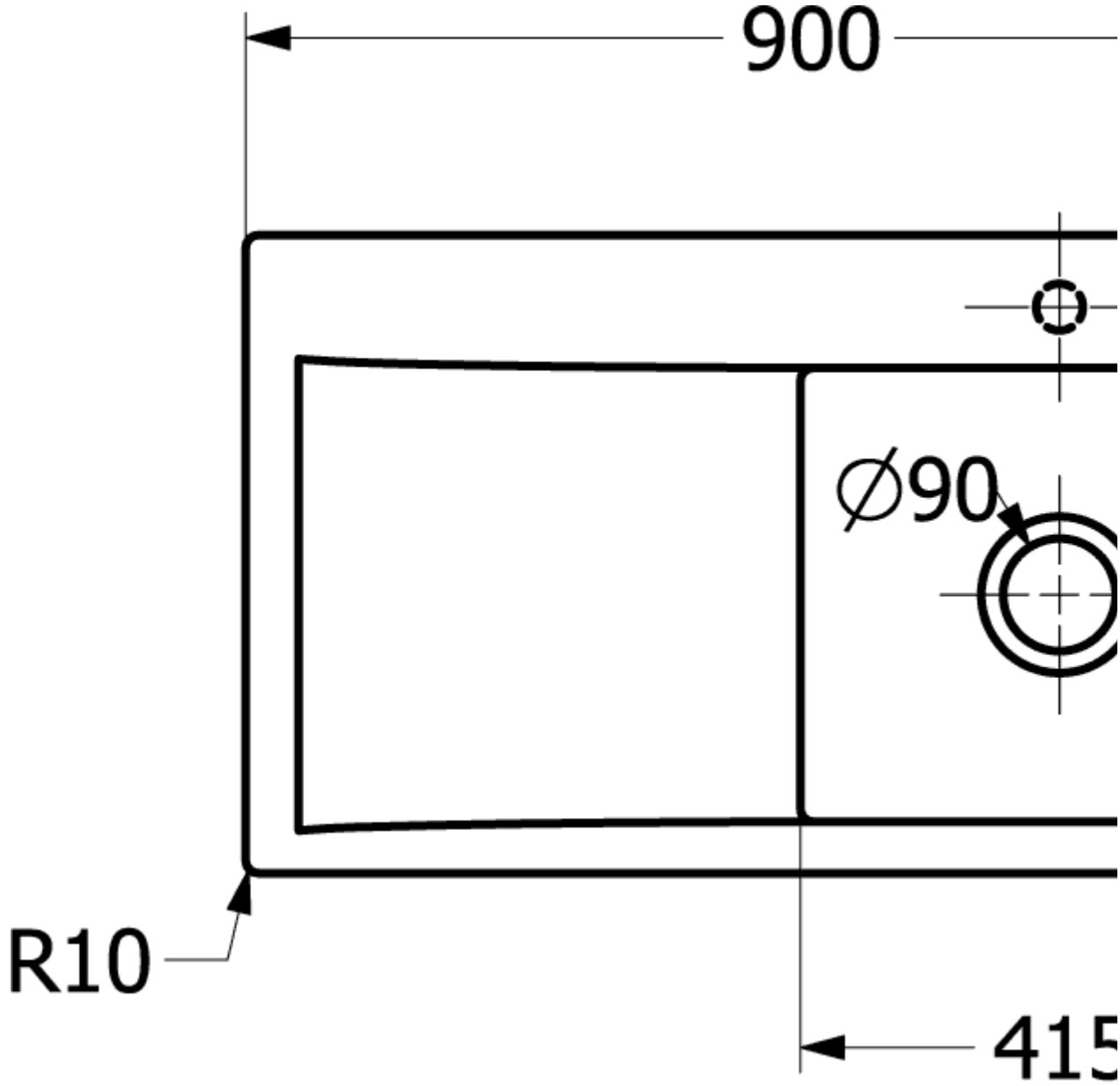
900
∅90
R10
415

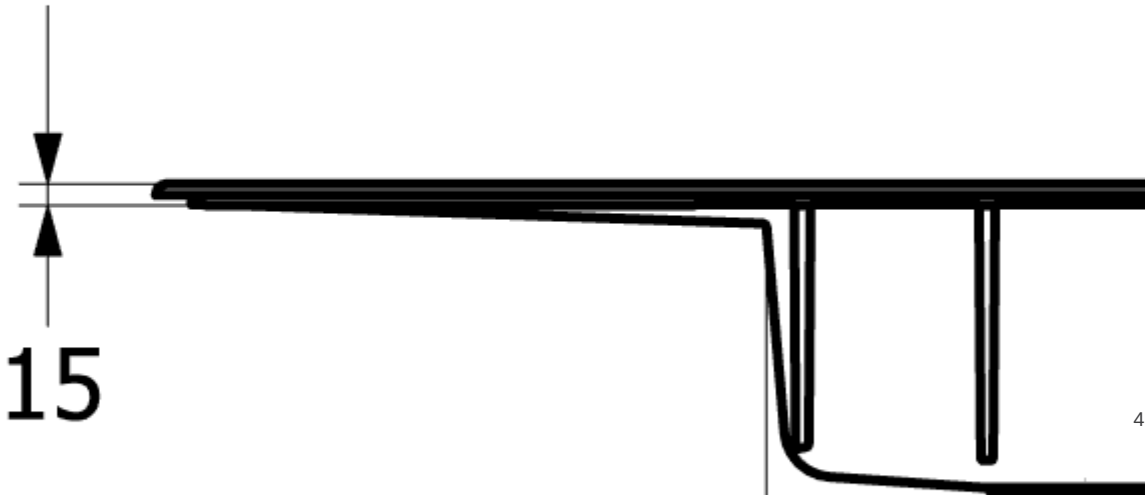
15
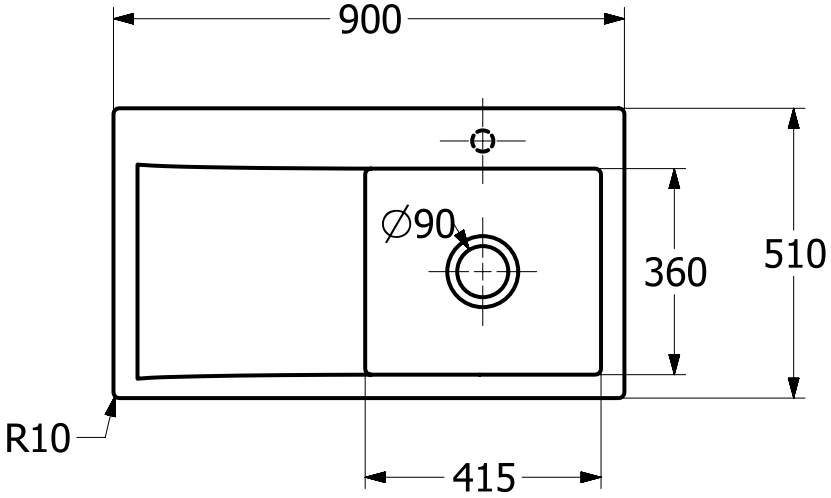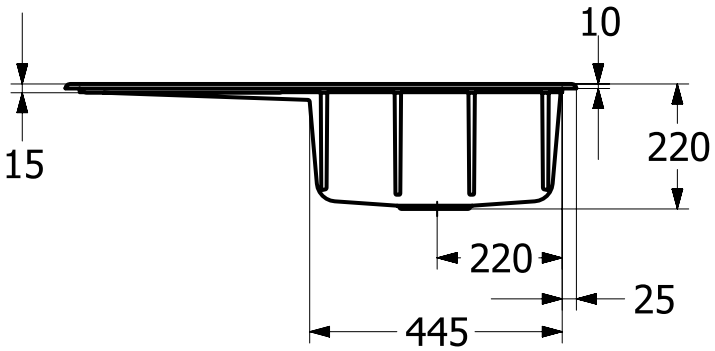
335102R1