SUBWAY STYLE 50 FLAT FLUSH-MOUNTED SINK RECTANGLE

PRODUCT INFORMATION

Article title	Villeroy & Boch Subway Style 50 Flat Flush-mounted sink, included Waste system hand-operated, of Ceramic, 880 x 490 mm, White Alpin CeramicPlus
Article number	33511FR1
Assembly / Assembly type	flush-fitting installation
Assembly instructions	minimum unit width: 50 cm
Scope of delivery	1 x sink , 1 x basket strainer waste
Length in mm	490
Width in mm	880
Height in mm	220
Interior depth	200
Collection	Subway Style 50 Flat
Material	Ceramic
Colour name	White Alpin CeramicPlus
Other material	Grate: Stainless steel Valve: Stainless steel
Position of main bowl	Basin on right
Function of the drain fitting	basket strainer waste
Colour designation	White Alpin
Other colour designations	Grate: Chrome, Valve: Chrome

TECHNICAL DRAWINGS

33511FR1

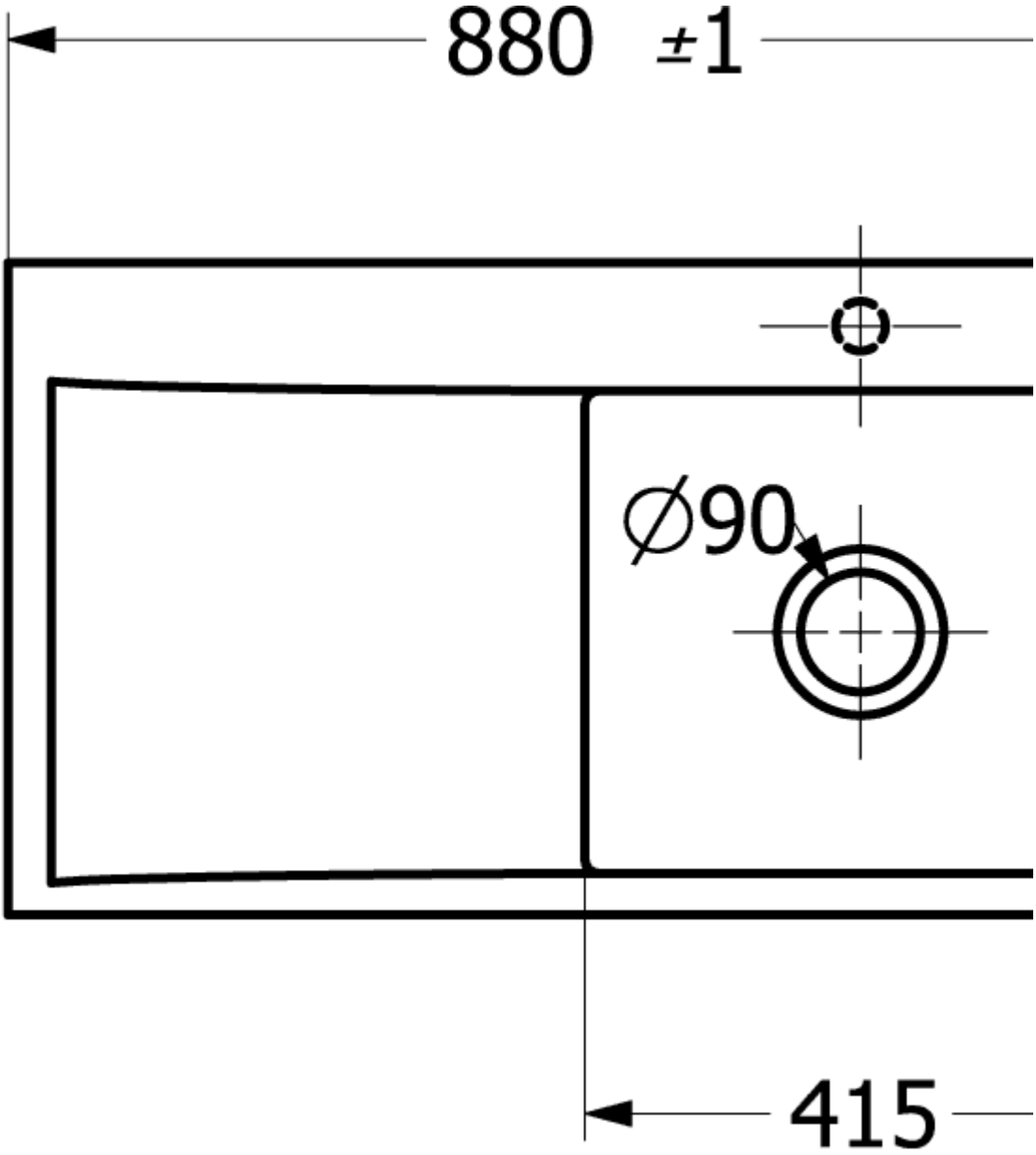
880 ±1
∅90
415

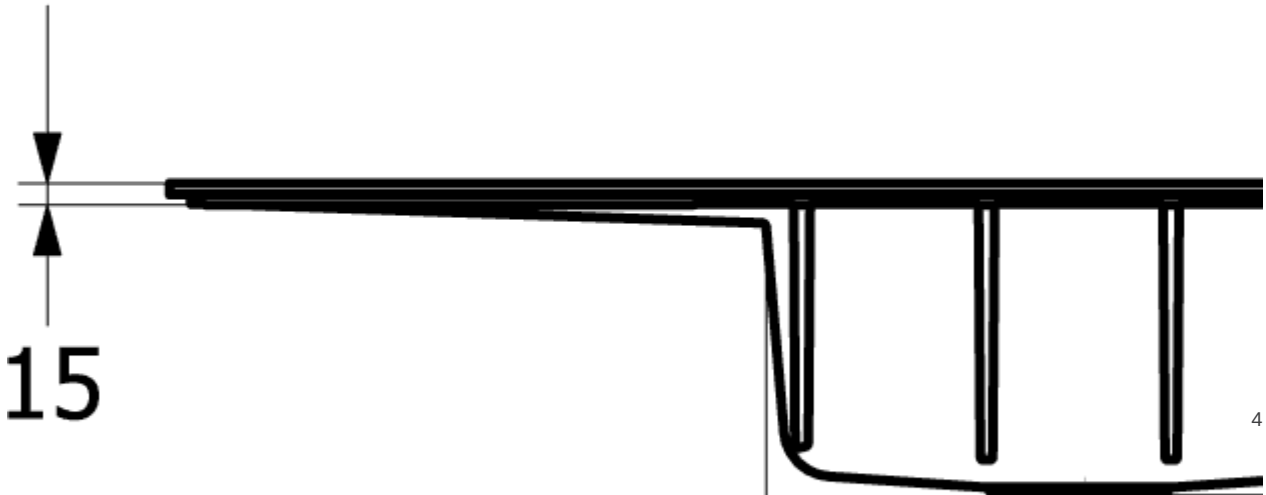
15
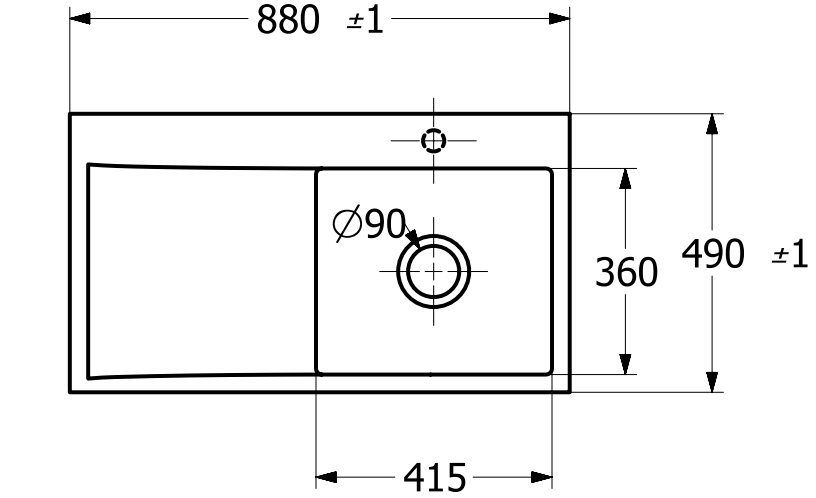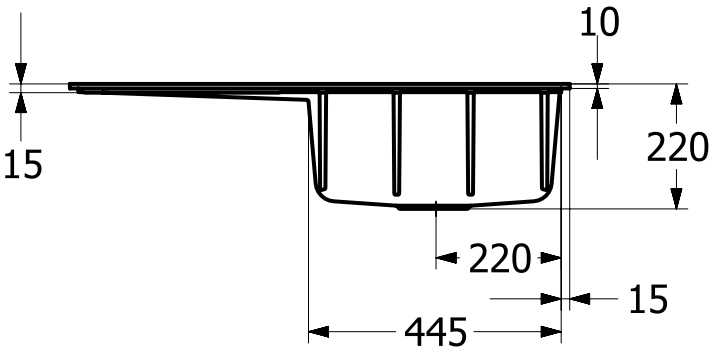
33511FR1