CONDOR 45 BUILT-IN SINK RECTANGLE

PRODUCT INFORMATION

Article title	Villeroy & Boch Condor 45 Built-in sink, included Waste system pop-up, Espresso glossy
Article number	674502KS
Assembly / Assembly type	surface-mounted installation
Assembly instructions	minimum unit width: 45 cm
Scope of delivery	1 x sink , 1 x pop-up waste system 1 x cover cap, round
Interior depth	180
Collection	Condor 45
Colour name	Espresso glossy
Position of main bowl	Basin, reversible
Function of the drain fitting	pop-up waste system

TECHNICAL DRAWINGS

674502KS

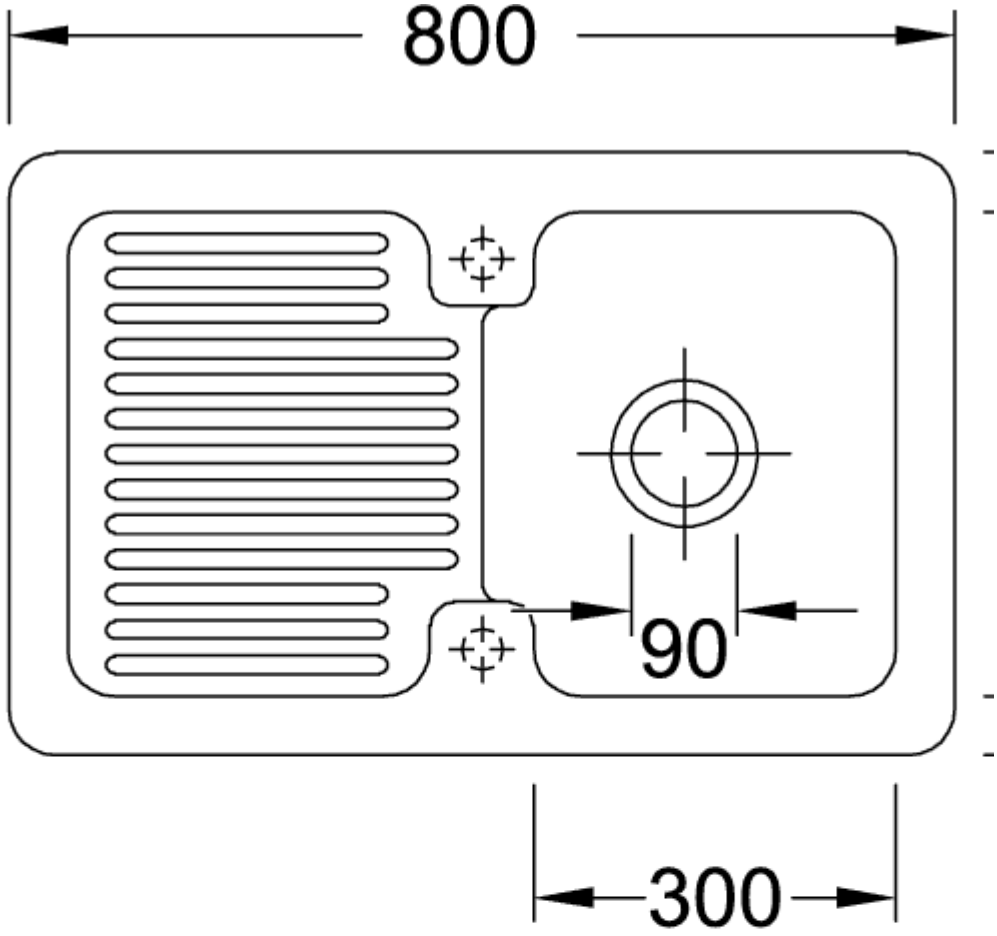

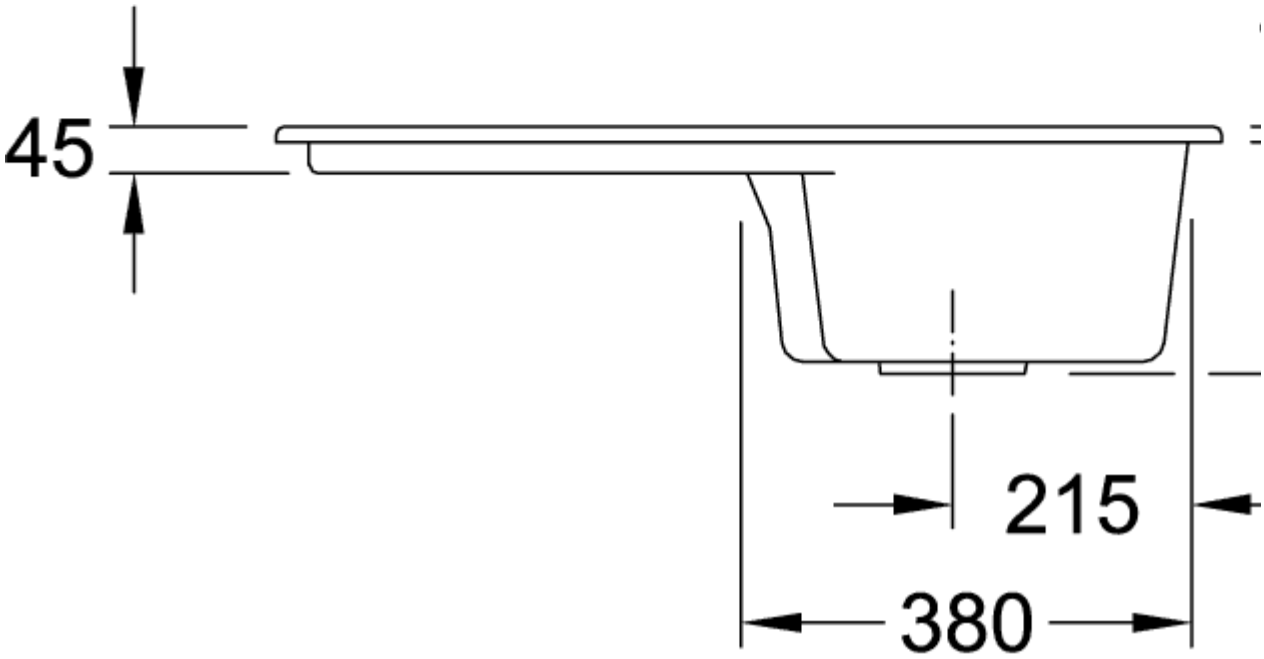
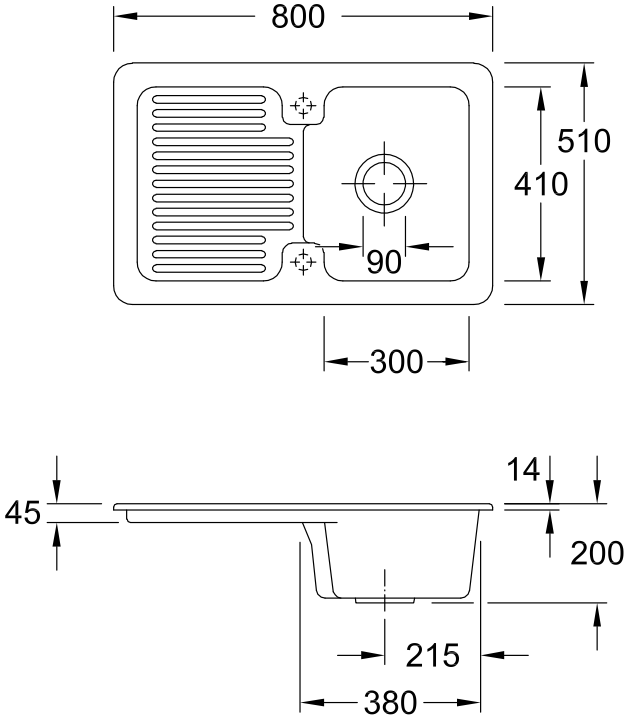
674502KS