SUBWAY 60 FLAT FLUSH-MOUNTED SINK RECTANGLE

PRODUCT INFORMATION

Article title	Villeroy & Boch Subway 60 flat Flush-mounted sink, included Waste system pop-up, of Ceramic, 965 x 475 mm, Snow White CeramicPlus
Article number	67702FKG
Assembly / Assembly type	flush-fitting installation
Assembly instructions	minimum unit width: 60 cm, Minimum thickness of the countertop when placed with a dishwasher: at least 4 cm|For flush-fit installation in natural stone or artificial stone countertops
Scope of delivery	1 x sink , 1 x pop-up waste system 1 x cover cap, round
Length in mm	475
Width in mm	965
Height in mm	220
Interior depth	200
Collection	Subway 60 flat
Material	Ceramic
Colour name	Snow White CeramicPlus
Other material	Grate: Stainless steel Valve: Stainless steel
Position of main bowl	Basin on left
Function of the drain fitting	pop-up waste system
Colour designation	Snow White
Other colour designations	Grate: Chrome, Valve: Chrome

TECHNICAL DRAWINGS

67702FKG

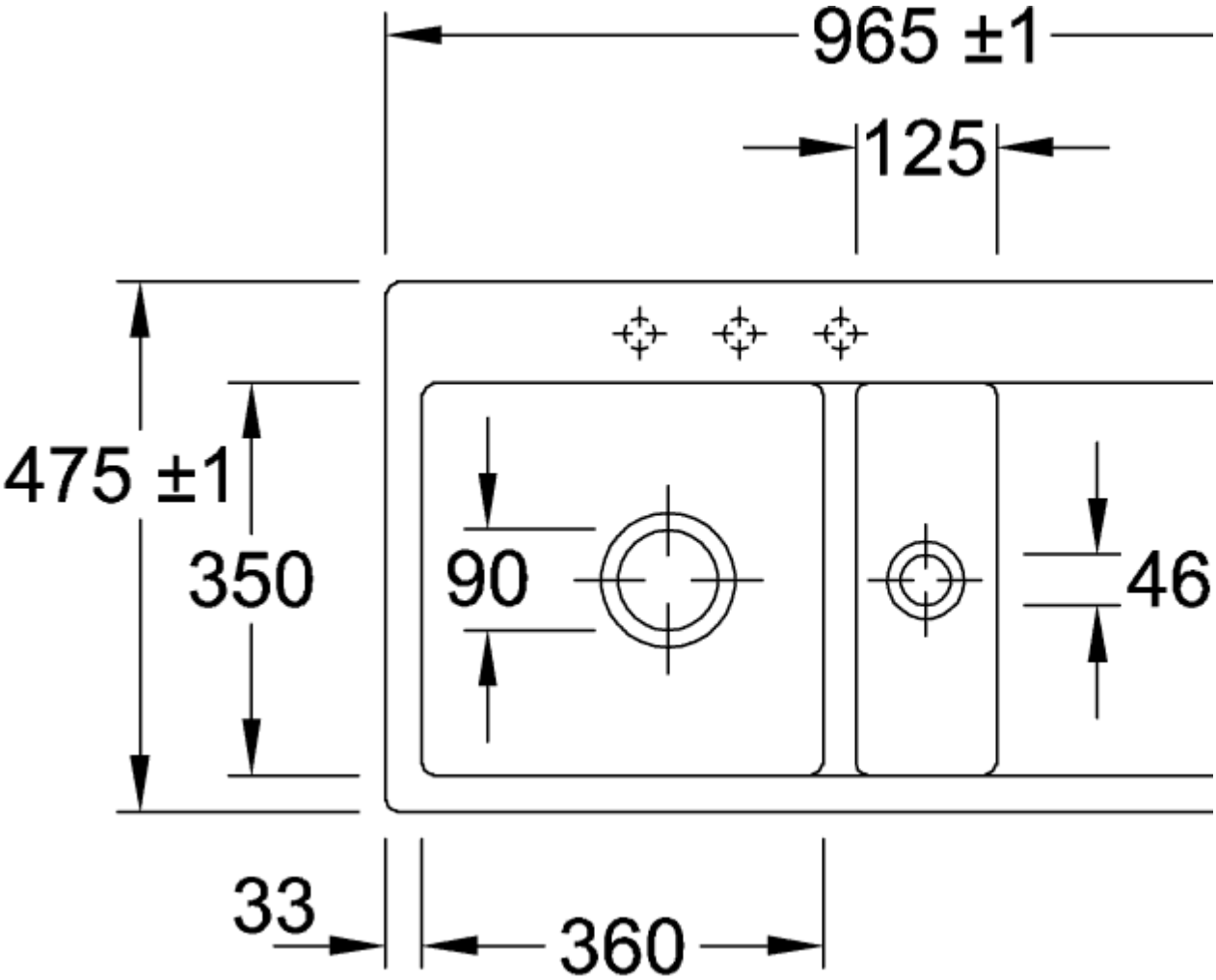
965 ±1
125
475 ±1
350
90
46
33
360

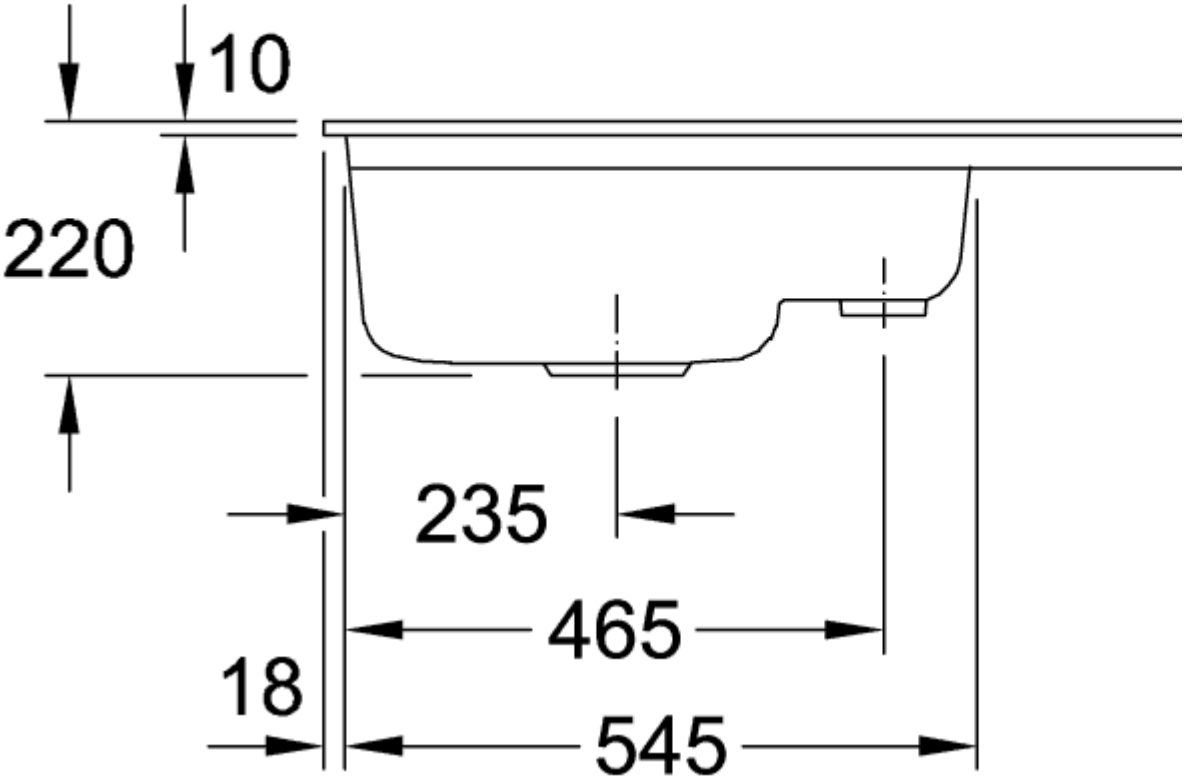
10
220
235
465
18
545
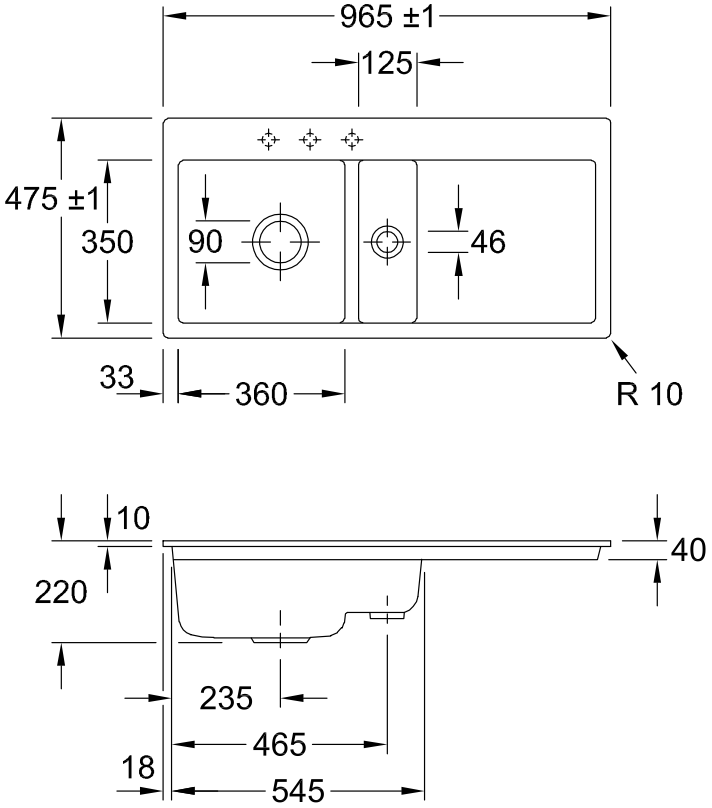
67702FKG