SILUET 60 FLAT FLUSH-MOUNTED SINK RECTANGLE

PRODUCT INFORMATION

Article title	Villeroy & Boch Siluet 60 flat Flush-mounted sink, included Waste system pop-up, of TitanCeram, 980 x 490 mm, White Alpin CeramicPlus
Article number	33362FR1
Assembly / Assembly type	flush-fitting installation
Assembly instructions	minimum unit width: 60 cm, Minimum thickness of the countertop when placed with a dishwasher: at least 3 cm|For flush-fit installation in natural stone or artificial stone countertops
Scope of delivery	1 x sink , 1 x pop-up waste system 1 x cover cap, round
Length in mm	490
Width in mm	980
Height in mm	220
Interior depth	200
Collection	Siluet 60 flat
Material	TitanCeram
Colour name	White Alpin CeramicPlus
Other material	Grate: Stainless steel Valve: Stainless steel
Design Awards	KitchenInnovation of the Year® 2018
Position of main bowl	Basin, reversible
Function of the drain fitting	pop-up waste system
Colour designation	White Alpin
Other colour designations	Grate: Chrome, Valve: Chrome

TECHNICAL DRAWINGS

33362FR1

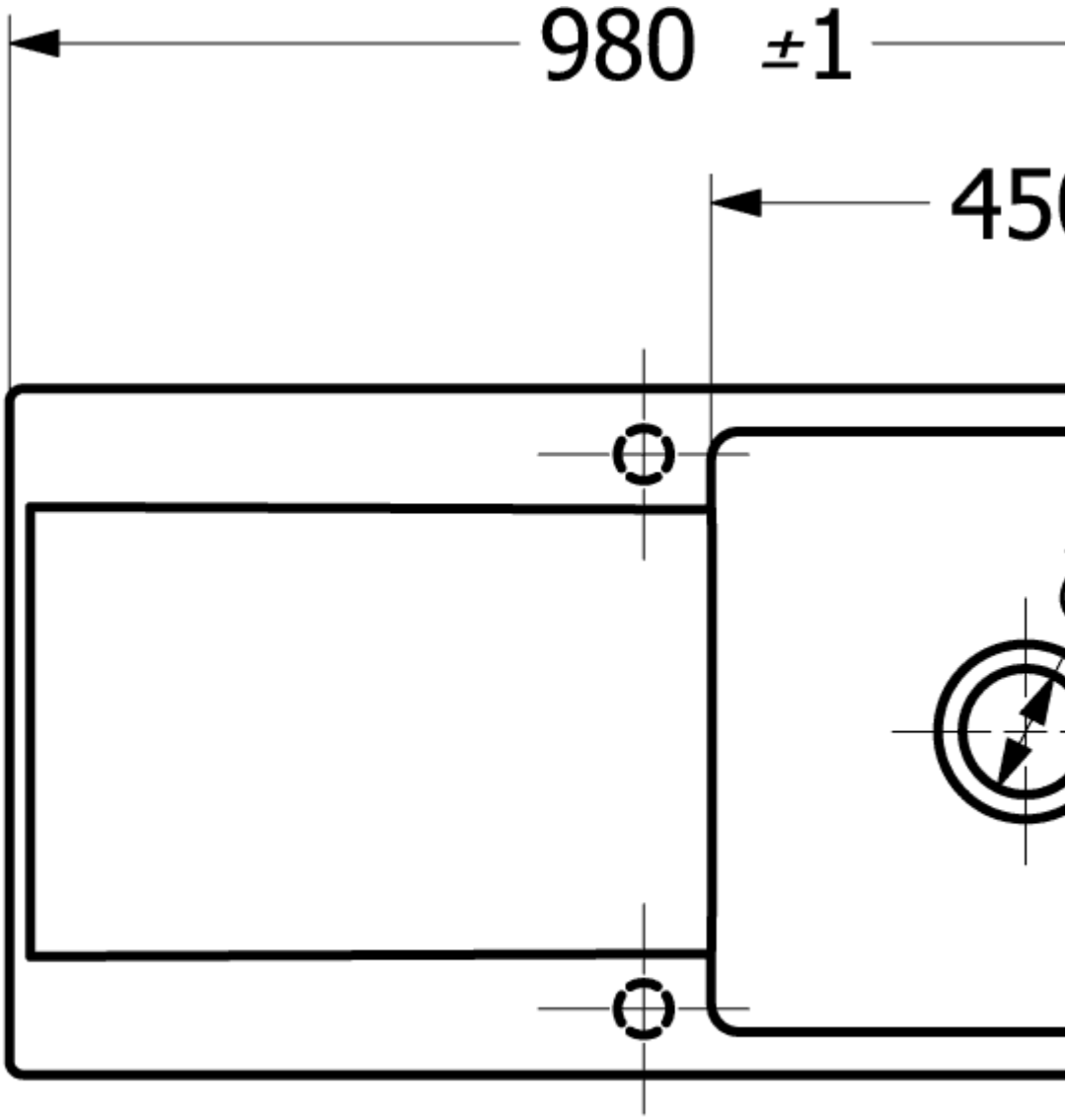
980 ±1
45

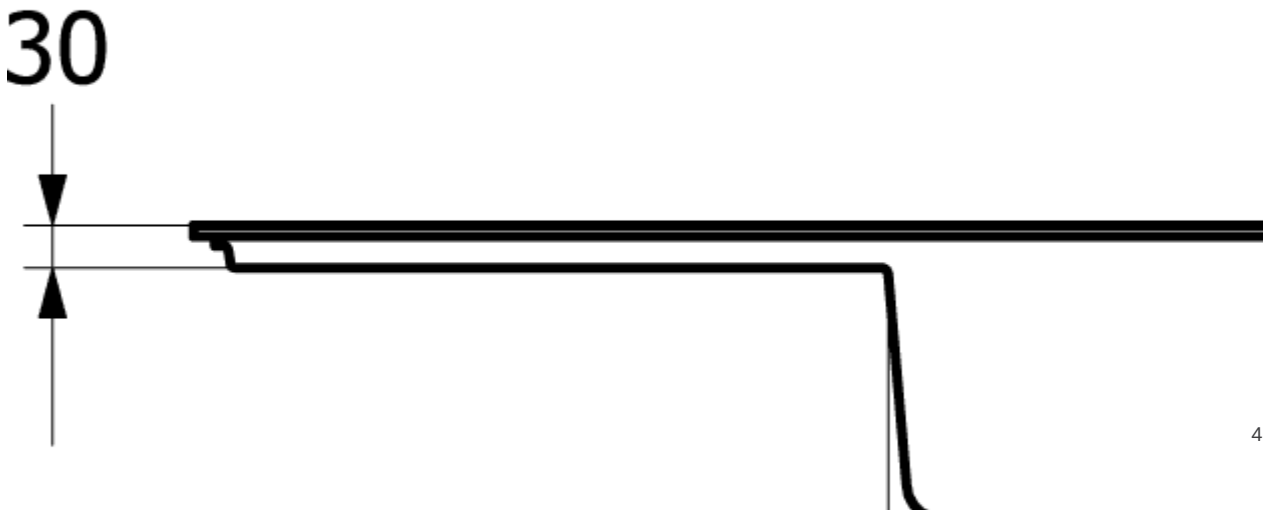
30
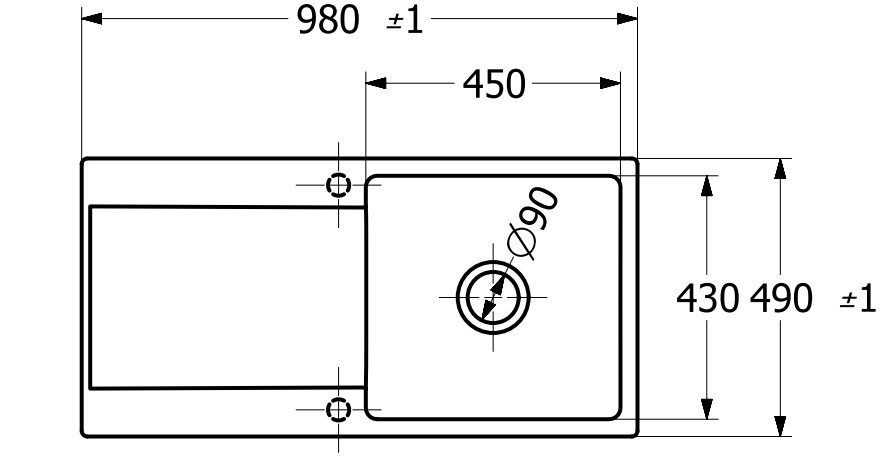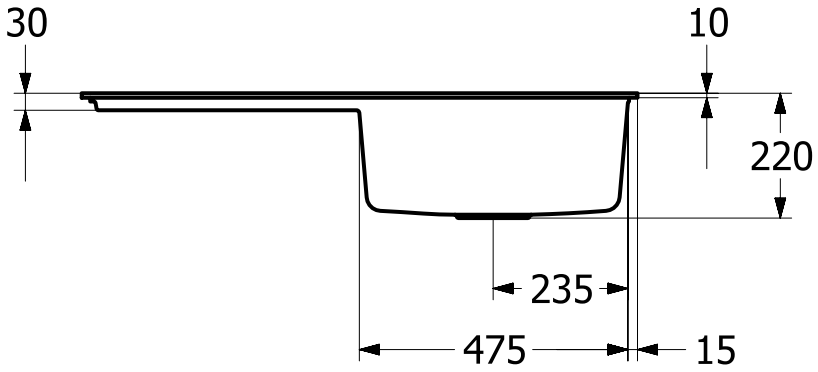
33362FR1